valentin DRUCKSYSTEME

DYNACODE II

Operating Manual

Quality . Tradition . Innovation

Information on the scope of delivery, appearance, performance, dimensions and weight reflect our knowledge at the time of printing.

We reserve the rights to make modifications.

Due to the constant further development of our devices discrepancies between manual and device can occur.
Please check www.carl-valentin.de for the latest update.

Trademarks

All named brands or trademarks are registered brands or registered trademarks of their respective owners and may not be separately labelled. It must not be concluded from the missing labelling that it is not a registered brand or a registered trademark.

Carl Valentin direct print modules comply with the following EU directives:

CE EU Low-Voltage Directive (2014/35/EU)
EU Electromagnetic Compatibility Directive (2014/30/EU)

REDEMAC
3540 Griffith St, Saint-Laurent, Quebec H4T 1A7
Phone: (888) 335-9570

www.redemac.com
request@redemac.com

Table of Contents

1 Introduction ... 7
- 1.1 General Instructions ... 7
- 1.2 Intended Use ... 7
- 1.3 Safety Instructions ... 8
- 1.4 Decommissioning and Dismantling ... 9

2 Machine Overview ... 11
- 2.1 Connection Side of Print Mechanics ... 11
- 2.2 Connector Assignment of Control Unit ... 12

3 Continuous Mode ... 13
- 3.1 Material Speed ... 13
- 3.2 Print Principle ... 13
- 3.3 Material Guiding ... 14

4 Intermittent Mode ... 15
- 4.1 Print Principle ... 15
- 4.2 Print Position ... 15

5 Operating Conditions ... 17

6 Technical Data ... 21
- 6.1 Control Inputs and Outputs (Standard) ... 23
- 6.2 Control Inputs and Outputs (Option) ... 28
- 6.3 Registered Functions/Profiles for Inputs/Outputs ... 32
- 6.4 Pin Assignment of Encoder Socket ... 35

7 Installation and Initial Operation ... 37
- 7.1 Install the Print Mechanics at Machines ... 38
- 7.2 Required Space for Cable Outgoing ... 39
- 7.3 Connect the Pneumatic Power Supply ... 40
- 7.4 Adjust the Pressure Power ... 41
- 7.5 Connect the Direct Print Module ... 42
- 7.6 Before Initial Operation ... 42
- 7.7 Print Control ... 43
- 7.8 Initial Operation ... 43

8 Load Transfer Ribbon Cassette ... 45
- 8.1 Transfer Ribbon with Coating Outside ... 45
- 8.2 Transfer Ribbon with Coating Inside ... 46
- 8.3 Increase the Clamping Force for Ribbon Roll ... 47

9 Function Menu ... 49
- 9.1 Menu Structure (Continuous Mode) ... 49
- 9.2 Menu Structure (Intermittent Mode) ... 54
- 9.3 Print Settings ... 59
- 9.4 Machine Parameters (Continuous Mode) ... 60
- 9.5 Machine Parameters (Intermittent Mode) ... 62
- 9.6 Layout ... 64
  - 9.6.1 Layout Settings ... 64
  - 9.6.2 General Parameters ... 64

9.7 Device Settings ... 65
9.7.1 Print Job ... 65
9.7.2 Print Control ... 67
9.7.3 User Environment ... 67
9.7.4 General Parameters ... 67
9.8 I/O Parameters ... 68
9.8.1 I/O Port Parameter 1-8 ... 68
9.8.2 I/O Port Parameter 9-16 ... 68
9.8.3 General Parameters ... 68
9.9 Ribbon Saving / Foil Saving ... 70
9.10 Ribbon Saving STANDARD (Continuous Mode) ... 71
9.10.1 Required Parameters ... 71
9.10.2 Print Performance Information ... 73
9.10.3 Expert Parameters ... 73
9.10.4 General Parameters ... 75
9.11 Ribbon Saving SHIFT (Continuous Mode) ... 75
9.11.1 Required Parameters ... 75
9.11.2 Ribbon Saving SHIFT Parameters ... 77
9.11.3 Expert Parameters ... 79
9.11.4 General Parameters ... 80
9.12 Ribbon Saving SAVESTRT (Continuous Mode) ... 81
9.12.1 Required Parameters ... 81
9.12.2 Expert Parameters ... 82
9.12.3 General Parameters ... 84
9.13 Ribbon Saving STANDARD (Intermittent Mode ... 85
9.13.1 Required Parameters ... 85
9.13.2 Expert Parameters ... 86
9.13.3 General Parameters ... 86
9.14 Ribbon Saving SHIFT (Intermittent Mode) ... 87
9.14.1 Required Parameters ... 87
9.14.2 Ribbon Saving SHIFT Parameters ... 88
9.14.3 Expert Parameters ... 91
9.14.4 General Parameters ... 91
9.15 Network ... 92
9.16 Interface ... 93
9.16.1 COM1 ... 93
9.16.2 General Parameters ... 93
9.17 Emulation ... 94
9.18 Date/Time ... 95
9.18.1 Daylight Saving Time (DST) ... 95
9.18.2 Start Daylight Saving Time ... 95
9.18.3 End Daylight Saving Time ... 95
9.18.4 General Parameters ... 95
9.19 Service Functions ... 96
9.19.1 Sensor Status ... 96
9.19.2 Device Status ... 97

9.19.3 Ribbon Service ... 98
9.19.4 Brake Service ... 99
9.19.5 I/O Status ... 99
9.19.6 Encoder Service ... 100
9.19.7 General Parameters ... 101
9.20 Password ... 102
9.20.1 Operation ... 102
9.20.2 Network ... 103
9.21 Maintenance ... 104
9.21.1 Test Function ... 104
9.21.2 Print Preview ... 104
9.21.3 LCD ... 105
9.21.4 System Settings ... 105
9.22 Main Menu ... 105

10 Touch-Screen Display ... 107
10.1 Touch-Sscreen Display Structure ... 107
10.2 Different Menus ... 108
10.3 User-Defined Info Field ... 109
10.4 Favorites List ... 111
10.5 Parameter Input ... 113
10.6 Navigation Zones ... 115
10.7 Maintenance Zone ... 116
10.8 Process Data ... 122
10.9 Memory Menu ... 124
10.10 Information Zone ... 126
10.11 Change to Foil Keyboard ... 126

11 Maintenance and Cleaning ... 127
11.1 General Cleaning ... 127
11.2 Clean the Transfer Ribbon Roller ... 128
11.3 Clean the Printhead ... 128
11.4 Replace the Printhead ... 129
11.5 Angle Adjustment (Intermittent Mode) ... 131
11.6 Print Quality Optimisation ... 132
11.7 Cycle Optimisation (Intermittent Mode) ... 133

12 Signal Diagrams ... 135
12.1 Continuous Mode ... 135
12.2 Intermittent Mode ... 139

13 Error Correction ... 141

14 Additional Information ... 151
14.1 Hotstart ... 151
14.1 Cycles for the continuous mode ... 153
14.2 Cycles for the intermittent mode ... 159

15 Environmentally-Friendly Disposal ... 163

16 Index ... 165

1 Introduction

1.1 General Instructions

Basic information and warning references with the corresponding signal words for the danger level are as follows specified in this manual:

DANGER identifies an extraordinarily great and immediate danger which could lead to serious injury or even death.

WARNING identifies a possible danger would could lead to serious bodily injury or even death if sufficient precautions are not taken.

WARNING of cutting injuries.

Pay attention that cutting injuries caused by blades, cutting devices or sharp-edged parts are avoided.

WARNING of hand injuries.

Pay attention that hand injuries caused by closing mechanical parts of a machine/equipment are avoided.

WARNING of hot surfaces.

Pay attention so as not to come into contact with hot surfaces.

CAUTION indicates a potentially dangerous situation which could lead to moderate or light bodily injury or damage to property.

NOTICE gives you tips. They make a working sequence easier or draw attention to important working processes.

Gives you tips on protecting the environment.

⇒ Handling instruction

* Optional accessories, special fittings

`Datum` Information in the display

1.2 Intended Use

The direct print module is a state-of-the-art device which complies with the recognized safety-related rules and regulations. Despite this, a danger to life and limb of the user or third parties could arise and the direct print module or other property could be damaged while operating the device.

The direct print module may only be used while in proper working order and for the intended purpose. Users must be safe, aware of potential dangers and must comply with the operating instructions. Faults, in particular those which affect safety, must be remedied immediately.

The direct print module is solely intended to print suitable media which have been approved by the manufacturer. Any other or additional use is not intended. The manufacturer/supplier is not liable for damage resulting from misuse. Any misuse is at your own risk.

Intended used includes heeding the operating manual, including the maintenance recommendations/regulations specified by the manufacturer.

NOTICE!

The complete documentation is included in the scope of delivery on CD ROM and can also currently be found in the internet.

1.3 Safety Instructions

The direct print module is designed for power supply systems of 110 … 230 V AC. Connect the direct print module only to electrical outlets with a ground contact.

Couple the direct print module to devices using extra low voltage only.

Before making or undoing connections, switch off all devices involved (computer, printer, accessories etc.).

Operate the direct print module in a dry environment only and do not get it wet (sprayed water, mist etc.).

Do not operate the direct print module in explosive atmosphere and not in proximity of high voltage power lines.

Operate the direct print module only in an environment protected against abrasive dust, swarf and other similar impurity.

Maintenance and servicing work can only be carried out by trained personnel.

Operating personnel must be trained by the operator on the basis of the operating manual.

Depending on use, ensure that clothing, hair, jewellery and similar personal items do not contact the exposed rotating parts and/or the moving parts (e.g. print carriage).

NOTICE!

With the open printing unit (due to construction) the requirements of EN 60950-1/EN 62368-1 regarding fire protection casing are not fulfilled. These must be ensured by the installation into the end device.

The print unit and parts of it (e.g. motor, printhead) can get hot during printing. Do not touch the printhead during operation. Cool down the print unit before changing material, removal or adjustment.

Never use highly inflammable consumables.

Carry out only the actions described in these operating instructions. Any work beyond this may only be performed by the manufacturer or upon agreement with the manufacturer.

Unauthorized interference with electronic modules or their software can cause malfunctions.

Other unauthorized work or modifications to the direct print module can endanger operational safety.

There are warning stickers on the direct print modules that draw your attention to dangers. Therefore the warning stickers are not to be removed as then you and others cannot be aware of dangers and may be injured.

1.4 Decommissioning and Dismantling

NOTICE!

The decommissioning of printing system can only be carried out by trained staff.

CAUTION!

Danger of injury by imprudent handling when lifting or placing the printing system.

⇒ Do not underestimate the weight of the printing system (9 … 12 kg).

⇒ Protect the printing system against uncontrolled movement.

2 Machine Overview

The continuous and intermittent operating direct print module with high resolution is designed for installation in horizontal and vertical packaging machines. Convincing is the availability of left and right versions. Thanks to the separate control unit the direct print module can be integrated almost in each packaging process without any problems.

Flexible labelling of packaging foil is effected either by means of Windows printer driver included in delivery or by our proven design software Labelstar Office.

With eight vector fonts, six bitmap fonts and six proportional fonts the direct print module has a large selection at different font types. It can be printed inverse, in italic format or 90 degrees turned fonts.

The handling of our durable direct print modules is easy and comfortable. The device settings can be made by the integrated, intuitive touch-screen display.

By a new-developed electronics a maximum print speed up to 800 mm/s (continuous mode) and max. 600 mm/s (intermittent mode) can be achieved.

Time-saving printer update is possible by interface.

As default, the direct print module is equipped with a parallel, serial, USB and Ethernet interface. Additionally, the direct print module is equipped with an USB Host that permits the connection of an external USB keyboard and/or an USB memory stick. The direct print module automatically recognizes by which interface it is controlled.

Thanks to the large number of options the direct print module can be adapted to each task.

2.1 Connection Side of Print Mechanics

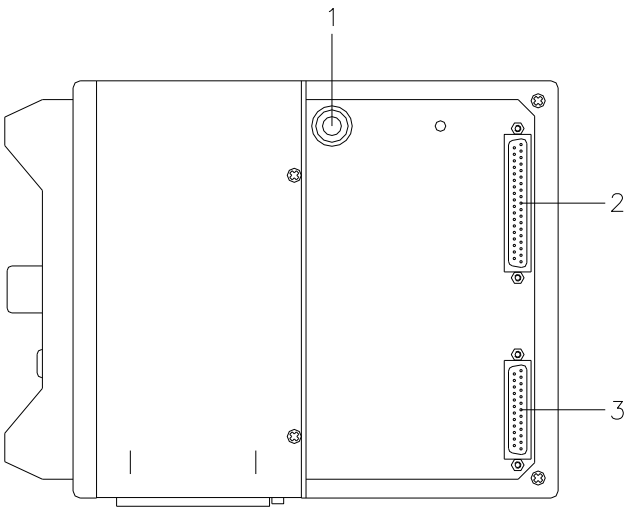

1 = Pneumatic connection

2 = Connecting cable SPI (printhead + sensors)

3 = Connecting cable Power

Figure 1

2.2 Connector Assignment of Control Unit

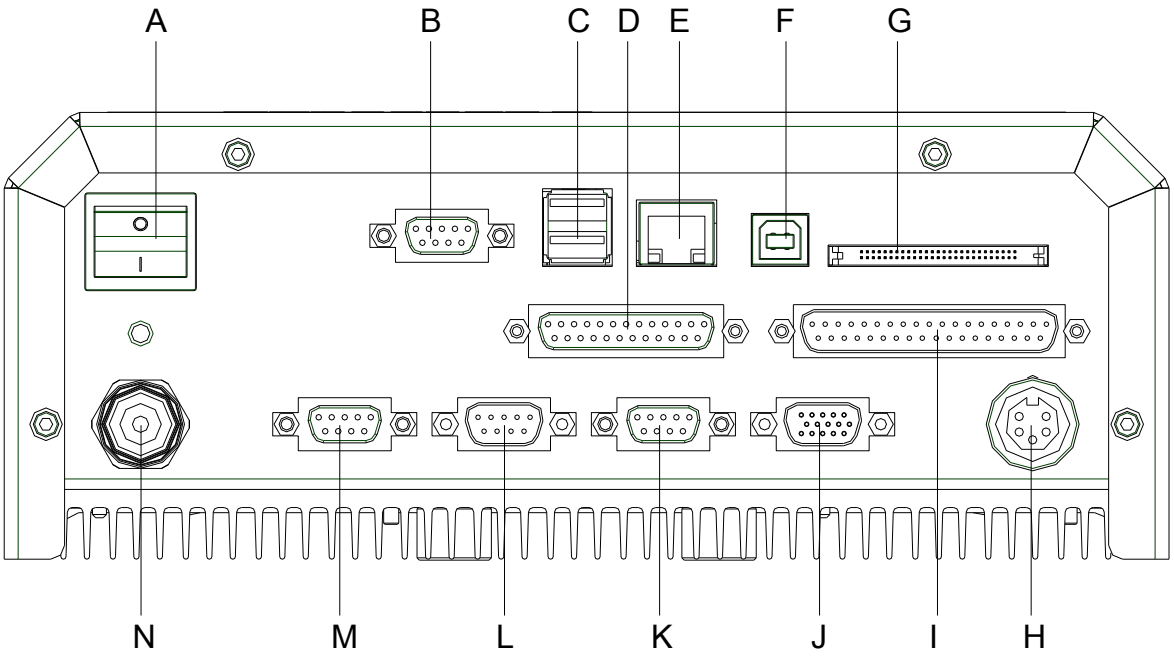

Figure 2

A =	Switch	
B =	Serial interface RS-232	
C =	USB Host interface (USB-B)	
D =	Connecting cable Power	
E =	Ethernet interface	
F =	USB interface (USB-A)	
G =	CF card slot	
H =	Connection encoder	
I =	Connecting cable SPI (printhead + sensor)	
J =	Standard	Option
	SUB-D female connector 15pin External socket I/O-24 see chapter 6.1	SUB-D male connector 9pin External input 5-8 see chapter 6.1
K =	Externer Ausgang 5-8 (Output II)	
L =	Externer Eingang 1-4 (Input I)	
M =	Externer Ausgang 1-4 (Output I)	
N =	Power line	

3 Continuous Mode

3.1 Material Speed

Please note that the material has sufficient adhesion at the pressure transducer roll or encoder roll to permit the exact speed by the encoder.

It is only possible to print when respecting the operating conditions, i.e. the speed has to be observed.

3.2 Print Principle

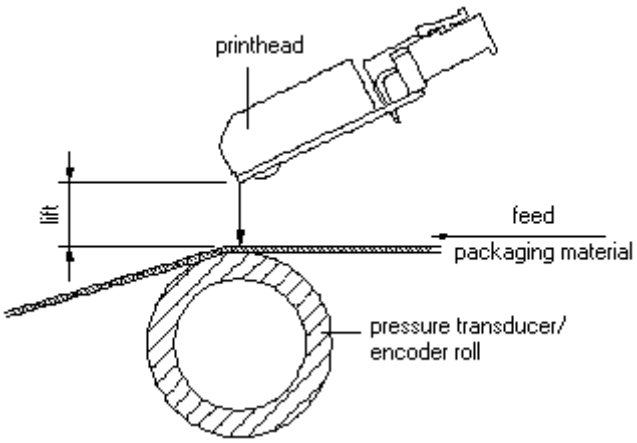

Figure 3

After starting a print order the printhead moves against the print medium. The feed of material is registered by the encoder and then evaluated. The printhead is in start position as long as the printing onto the moving material is finished and then it moves back to its home position.

3.3 Material Guiding

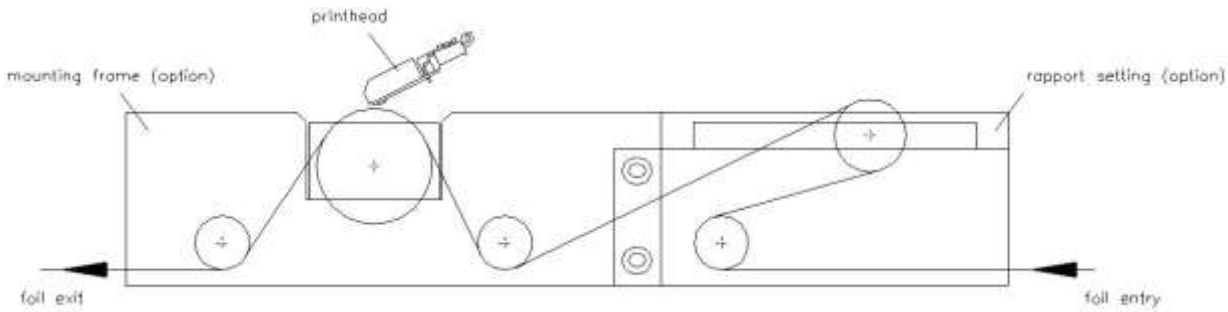

Figure 4

NOTICE!
In case the encoder is connected to the counter-pressure roll or the encoder roll you have to observe that the material has sufficient adhesion at the pressure roll or encoder roll to guarantee an exact speed by the encoder.

4 Intermittent Mode

4.1 Print Principle

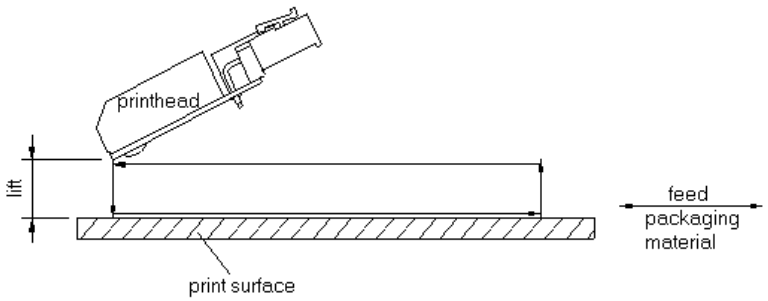

Figure 5

After starting a print order the printhead moves against the print medium. Afterwards the printing carriage moves corresponding to the set or transferred layout length linear over the material which is to be printed. After the print procedure the printhead again lifts up and the printing carriage moves again to the starting position.

4.2 Print Position

NOTICE!

The direct print module is delivered with a default print length of 65 mm. In order to use the maximum print length of 75 mm, the print position value must be changed to 93 (see chapter 9.5 Machine Parameters (Intermittent Mode), page 62).

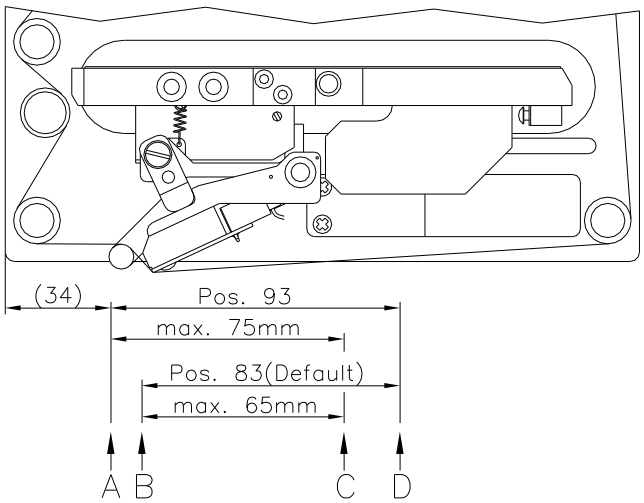

Figure 6

A: Print pos. / Start pos. value = 93

B: Print pos. / Start pos. value = 83

C: Max. position print end

D: Stand-by position

5 Operating Conditions

Before initial operation and during operation these operating conditions have to be observed to guarantee save and interference-free service of our direct print modules.

Therefore please carefully read these operating conditions.

Shipment and storage of our direct print modules are **only** allowed in original packing.

Installation and initial operation of direct print modules is only allowed if operating conditions were **fulfilled**.

Initial operation, programming, operation, cleaning and service of our direct print modules are only recommended after careful study of our manuals.

Operation of direct print modules is only allowed by especially trained persons.

NOTICE!

Perform trainings regularly.
Content of the training are chapter 5 (Operating Conditions), chapter 8 (Load Transfer Ribbon Cassette) and chapter 11 (Maintenance and Cleaning).

These indications are also valid for someone else's equipment supplied by us.

Only use original spare and exchange parts.

Please contact the manufacturer with respect to spare/wear parts.

Conditions for installation place

The installation place of direct print module should be even, free of vibration and currents of air are to be avoided.

The direct print modules have to be installed to ensure optimal operation and servicing.

Installation of power supply

The installation of the power supply to connect our direct print modules has to be effected according to the international rules and regulations, especially the recommendations of one of the three following commissions:

- International Electronic Commission (IEC)
- European Committee for Electro technical Standardisation (CENELEC)
- Verband Deutscher Elektrotechniker (VDE)

Our direct print modules are constructed according to VDE and have to be connected to a grounded conductor. The power supply has to be equipped with a grounded conductor to eliminate internal interfering voltage.

Technical data of power supply

Power line voltage and power line frequency: See type plate

Allowable tolerance of power line voltage:
+6 % … −10 % of nominal value

Allowable tolerance of power line frequency:
+2 % … −2 % of nominal value

Allowable distortion factor of power line voltage: ≤ 5 %

Anti-interference measures

In case your net is infected (e.g. by using thyristor controlled machines) anti-interference measures have to be taken. Please use one of the following possibilities:

- Provide separate power supply to our direct print modules.
- In case of problems please connect capacity-decoupled isolation transformer or similar interference suppressor in front of our direct print modules.

Connecting lines to external machines

All connecting lines have to be guided in shielded lines. Shielding has to be connected on both sides to the corner shell.

It is not allowed to guide lines parallel to power lines. If a parallel guiding cannot be avoided a distance of at least 0.5 m has to be observed.

Temperature of lines between: −15 … +80 °C.

It is only allowed to connect devices which fulfil the request 'Safety Extra Low Voltage' (SELV). These are generally devices which are checked corresponding to EN 60950/EN 62368-1.

Installation of data lines

The data cables must be completely protected and provide with metal or metallised connector housings. Shielded cables and connectors are necessary, in order to avoid radiant emittance and receipt of electrical disturbances.

Allowable lines

Shielded line:

4 x 2 x 0,14 mm² (4 x 2 x AWG 26)
6 x 2 x 0,14 mm² (6 x 2 x AWG 26)
12 x 2 x 0,14 mm² (12 x 2 x AWG 26)

Sending and receiving lines have to be twisted in pairs.

Maximum cable length:

interface V 24 (RS-232C) - 3 m (with shielding)
USB - 3 m
Ethernet - 100 m

Air convection

To avoid inadmissible heating, free air convection has to be ensured.

Limit values

Protection according IP: 20

Ambient temperature °C (operation): Min. +5 Max. +40

Ambient temperature °C (transport, storage): Min. −25 Max. +60

Relative air humidity % (operation): Max. 80

Relative air humidity % (transport, storage): Max. 80
(bedewing of direct print modules not allowed)

Guarantee

We do not take any responsibility for damage caused by:

- Ignoring our operating conditions and operating manual.
- Incorrect electric installation of environment.
- Building alterations of our direct print modules.
- Incorrect programming and operation.
- Not performed data protection.
- Using of not original spare parts and accessories.
- Natural wear and tear.

When (re)installing or programming our direct print modules please control the new settings by test running and test printing. Herewith you avoid faulty results, reports and evaluation.

Only specially trained staff is allowed to operate the direct print modules.

Control the correct handling of our products and repeat training.

We do not guarantee that all features described in this manual exist in all models. Caused by our efforts to continue further development and improvement, technical data might change without notice.

By further developments or regulations of the country illustrations and examples shown in the manual can be different from the delivered model.

Please pay attention to the information about admissible print media and the notes to the direct print module maintenance, in order to avoid damages or premature wear.

We endeavoured to write this manual in an understandable form to give and you as much as possible information. If you have any queries or if you discover errors, please inform us to give us the possibility to correct and improve our manual.

6 Technical Data

	Dynacode II 53	**Dynacode II 107**	**Dynacode II 128**
Print width	53.3 mm	106.6 mm	128 mm
Resolution	300 dpi	300 dpi	300 dpi
Print speed Continuous mode Intermittent mode	 50 … 800 mm/s 50 … 600 mm/s	 50 … 600 mm/s 50 … 600 mm/s	 50 … 600 mm/s 50 … 450 mm/s
Back speed	intermittend mode only: max. 800 mm/s		
Print length Continuous mode Intermittent mode	 6000 mm 75 mm	 3000 mm 75 mm	 3000 mm 75 mm
Frame passage width	customized	customized	customized
Printhead	Corner Type	Corner Type	Corner Type
Acoustic Emission (measuring distance 1 m)			
Average sound power level	60 dB(A)	65 dB(A)	68 dB(A)
Transfer Ribbon			
Ink	outside / inside (option)		
Max. roll diameter	98 mm	82 mm	75 mm
Core diameter	25.4 mm / 1"	25.4 mm / 1"	25.4 mm / 1"
Max. length	900 m	600 m	450 m
Max. width	55 mm	110 mm	130 mm
Dimensions in mm (width x height x depth)			
Print mechanics w/o mounting frame with mounting frame	 204 x 182 x 235 depends on passage width	 204 x 182 x 290	 204 x 182 x 310
Control unit	251 x 96 x 207 - connecting cable set to mechanics 2.5 m		
Weight			
Print mechanics	9.5 kg	11 kg	11.7 kg
Electronics (incl. cable)	5.5 kg	5.5 kg	5.5 kg
Electronics			
Processor	High Speed 32 Bit		
RAM	16 MB		
Slot	Compact Flash card type I		
Battery cache	for Real-Time clock (storage of data with shut-down)		
Warning signal	acoustic signal when error		
Interfaces			
Serial	RS-232C (up to 115.200 Baud)		
USB	2.0 High Speed Slave		
Ethernet	10/100 Base T, LPD, RawIP-Printing, DHCP, HTTP, FTP		
2 x USB Master	connection for external USB keyboard and memory stick		
Connection Values			
Pneumatic connection	6 bar dry and free of oil		
Air consumption typical* * hub 1,5 mm 150 cycle/min 6 bar operating pressure	150 ml/min	300 ml/min	300 ml/min
Nominal voltage	110 … 230 V AC / 50 … 60 Hz		
Nominal current	110 V AC / 3 A – 230 V AC / 1.5 A		
Fuse values	2x T4A 250 V		

Operation Data	
Temperature	5 … 40 °C
Humidity	max. 80 % (non-condensing)
Operation Panel	
Touchscreen Display	Colour display: 800 x 480 pixel, screen size 7"
Operating functions	favorites, function menu, memory card, print start, test print, feed, about menu
Settings	
	date, time, shift times 11 language settings (others on demand) print and device parameters, interfaces, password protection
Monitoring	
Stop printing if	end of ribbon / end of layout
Status report	extensive status print with information about settings e.g. print length counter, runtime counter, photocell interface and network parameters printout of all internal fonts and all supported bar codes
Fonts	
Font types	6 Bitmap fonts, 8 Vector fonts/TrueType fonts, 6 proportional fonts other fonts on demand
Character sets	Windows 1250 up to1257, DOS 437, 850, 852, 857 all West and East European Latin, Cyrillic, Greek and Arabic (option) characters are supported other character sets on demand
Bitmap fonts	size in width and height 0,8 … 5,6 zoom 2 … 9, orientation 0°, 90°, 180°, 270°
Vektor fonts/ TrueType fonts	size in width and height 1 … 99 mm variable zoom orientation 0°, 90°, 180°, 270°
Font attributes	depending on character font - bold, Italic, inverse, vertical
Font width	variable
Bar Codes	
1D bar codes	CODABAR, Code 128, Code 2/5 interleaved, Code 39, Code 39 extended, Code 93, EAN 13, EAN 8, EAN ADD ON, GS1-128, Identcode, ITF 14, Leitcode, Pharmacode, PZN 7 Code, PZN 8 Code, UPC-A, UPC-E
2D bar codes	Aztec Code, CODABLOCK F, DataMatrix, GS1 DataMatrix, MAXICODE, PDF 417, QR Code
Composite bar codes	GS1 DataBar Expanded, GS1 DataBar Limited, GS1 DataBar Omnidirectional, GS1 DataBar Stacked, GS1 DataBar Stacked Omnidirectional, GS1 DataBar Truncated
	all bar codes are variable in height, module width and ratio. orientation 0°, 90 °, 180°, 270°. Optionally with check digit and human readable line.
Software	
Configuration	ConfigTool
Process control	NiceLabel
Design software	Labelstar Office Lite Labelstar Office
Windows printer driver	Windows 7® - Windows 10® 32/64 Bit, Windows Server 2008® (R2) - Windows Server 2019®

Technical details are subject to change.

6.1 Control Inputs and Outputs (Standard)

Plug connection - back side of control unit

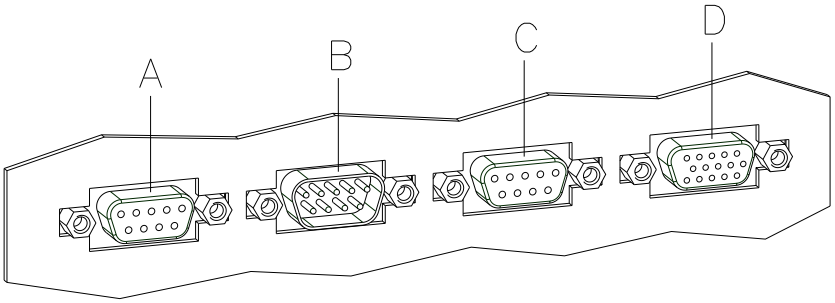

Figure 7

A = Output 1	Port 9-12
B = Input 1	Port 1-4
C = Output 2	Port 13-16
D = External bushing D = 15pin (I/O-24)	Port 1 + 9

Control outputs

By means of the signal outputs different operating states of the print module can be queried.

The signal outputs are provided by two 9-pin SUB-D-bushings (OUTPUT I and OUTPUT II) on the back side of the control unit.

They consist of optocoupler semiconductor sections, which are connected through and/or blocked according to different operating states.

The maximum allowable current in a semiconductor section is

Imax = 30 mA.

Output I
Figure 7, A

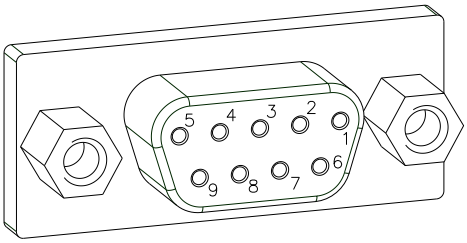

Figure 8

PIN (bushing)	Output I
9 (+) 5 (-)	Out 1 / Port 9: Error message Each error status such as ribbon error is displayed.
8 (+) 7 (-)	Out 2 / Port 10: Print order The print module was activated by a print order.
6 (+) 2 (-)	Out 3 / Port 11: Generation The print module is filled with current layout data.
4 (+) 3 (-)	Out 4 / Port 12: Layout print The content of print memory is transferred on the printable medium by means of the printhead.

Example Connection of a lamp to a 24V relay by Out 1:

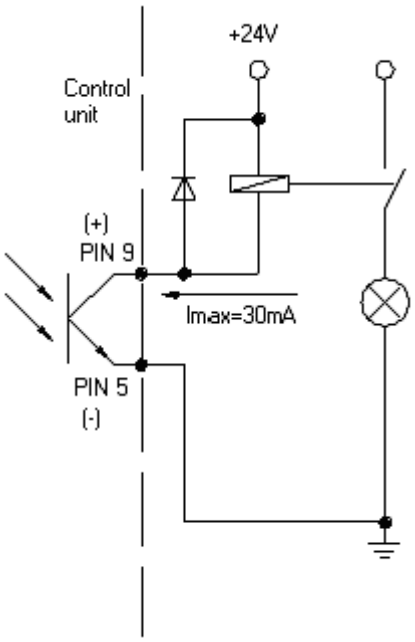

Figure 9

Output II
Figure 7, C

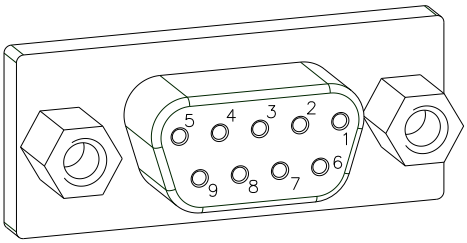

Figure 10

PIN (bushing)	Output II
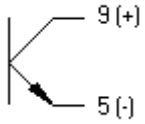	Out 5 / Port 13: Print-Ready signal It is indicated if the print module is ready to process a start impulse. In contrary to the print order signal, the generating time is taken into consideration.
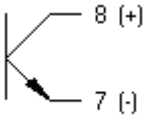	Out 6 / Port 14: Printhead up The printhead has reached the upper rest position (e.g. return to zero point).
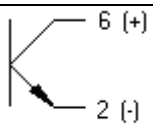	Out 7 / Port 15: Return to start After termination of print procedure the flexible part of the print module is moved back to the start position. After the start position was reached a new start can be released.
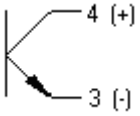	Out 8 / Port 16: Prior warning of transfer ribbon end

Control inputs

By means of the control inputs the print procedure can be controlled. The control inputs at Input I are galvanic separated and have to be provided with an external tension source. The signal level is active "HIGH".

Input I
Figure 7, B

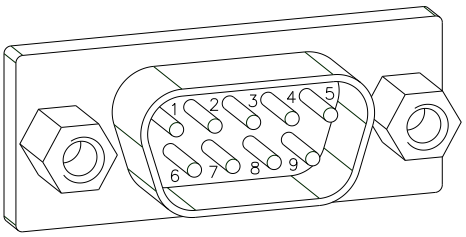

Figure 11

PIN (pin)	Input I
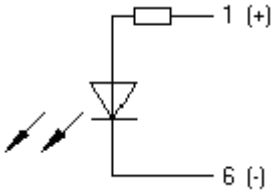	In 1 / Port 1: Print start
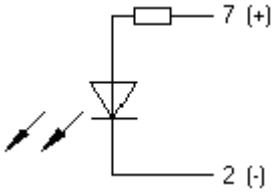	In 2 / Port 2: Not used
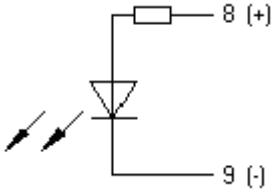	In 3 / Port 3: Reset external counter
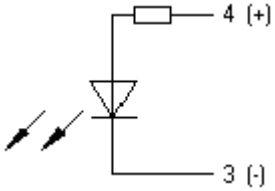	In 4 / Port 4: Not used

Example

Connection of a switch with 24V voltage supply by In 1 / Port 1:

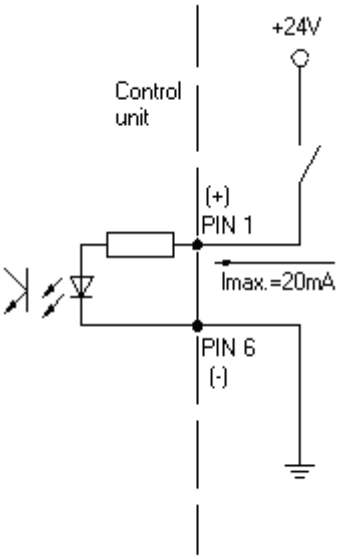

Figure 12

External bushing I/O-24
Figure 7, D

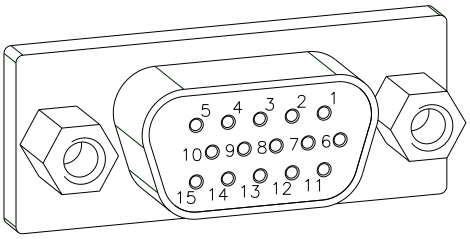

Figure 13

This input is executed as 15-pole and provides user-sided 24V/100mA.
In case of using this bushing, exists **no galvanic separation**.

PIN	Port	Function
1, 6		Gnd
5, 10		24 V / 100 mA
3	1	Print start (NPN initiator)
2		Print start (PNP initiator)
4 14		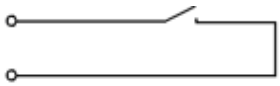 Print start by potential-free contact
7 13	9	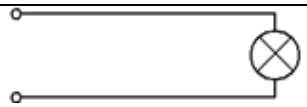 Signal lamp 24 V / 100 mA (error)

Pin assignment for connecting cable External bushing I/O-24

PIN 1	white
PIN 2	brown
PIN 3	green
PIN 4	yellow
PIN 5	grey
PIN 6	pink
PIN 7	blue
PIN 8	red
PIN 9	black
PIN 10	purple
PIN 11	grey-pink
PIN 12	red-blue
PIN 13	white-green
PIN 14	brown-green
PIN 15	free

Example 1

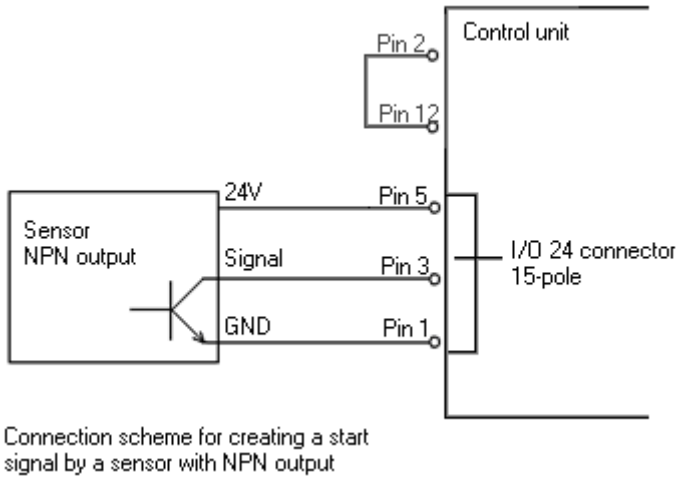

Figure 14

Example 2

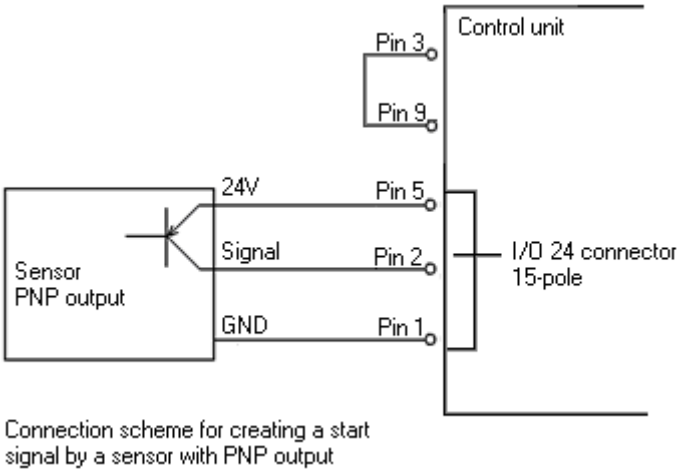

Figure 15

Example 3

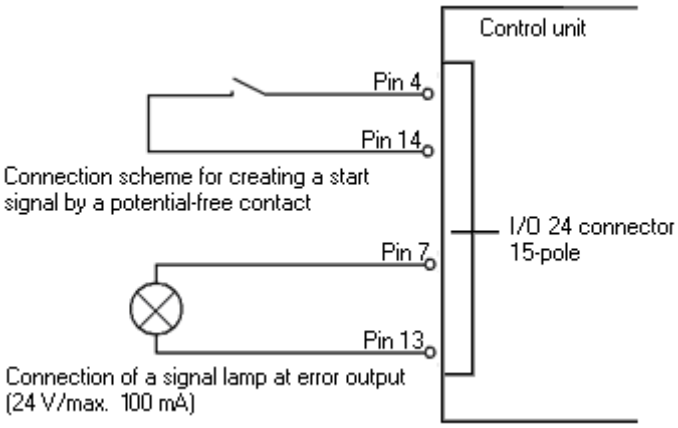

Figure 16

6.2 Control Inputs and Outputs (Option)

Plug connection - back side of control unit

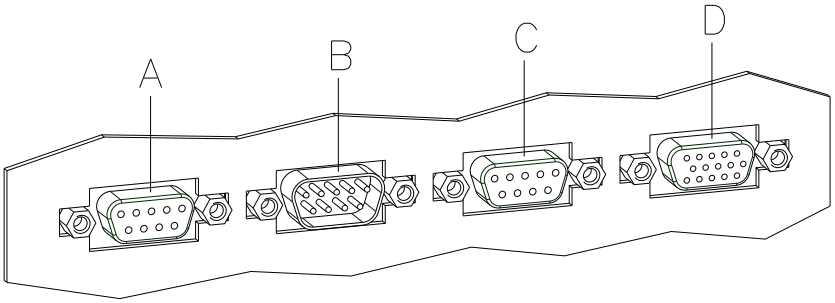

Figure 17

A = Output 1	Port 9-12
B = Input 1	Port 1-4
C = Output 2	Port 13-16
D = Input 2	Port 5-8

Control outputs

By means of the signal outputs different operating states of the print module can be queried.

The signal outputs are provided by two 9-pin SUB-D-bushings (OUTPUT I and OUTPUT II) on the back side of the control unit.

They consist of optocoupler semiconductor sections, which are connected through and/or blocked according to different operating states.

The maximum allowable current in a semiconductor section is

Imax = 30 mA.

Output I
Figure 7, A

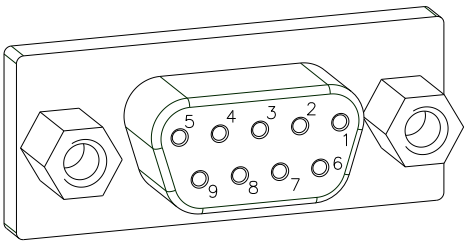

Figure 18

PIN (bushing)	Output I
9 (+) 5 (-)	Out 1 / Port 9: Error message Each error status such as ribbon error is displayed.
8 (+) 7 (-)	Out 2 / Port 10: Print order The print module was activated by a print order.
6 (+) 2 (-)	Out 3 / Port 11: Generation The print module is filled with current layout data.
4 (+) 3 (-)	Out 4 / Port 12: Layout print The content of print memory is transferred on the printable medium by means of the printhead.

Example Connection of a lamp to a 24V relay by Out 1:

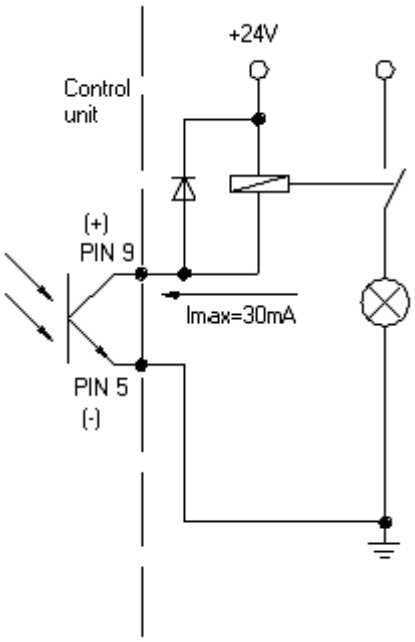

Figure 19

Output II
Figure 7, C

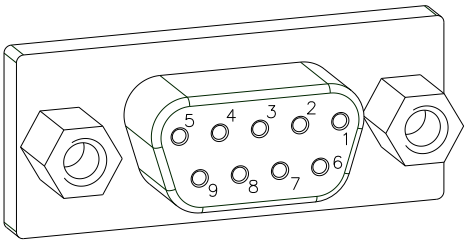

Figure 20

PIN (bushing)	Output II
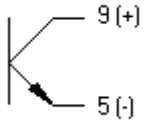	Out 5 / Port 13: Print-Ready signal It is indicated if the print module is ready to process a start impulse. In contrary to the print order signal, the generating time is taken into consideration.
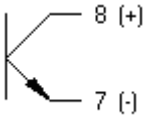	Out 6 / Port 14: Printhead up The printhead has reached the upper rest position (e.g. return to zero point).
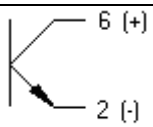	Out 7 / Port 15: Return to start After termination of print procedure the flexible part of the print module is moved back to the start position. After the start position was reached a new start can be released.
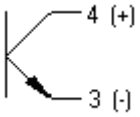	Out 8 / Port 16: Prior warning of transfer ribbon end

Control inputs

By means of the control inputs the print procedure can be controlled. The control inputs at Input I are galvanic separated and have to be provided with an external tension source. The signal level is active "HIGH".

Input I
Figure 7, B

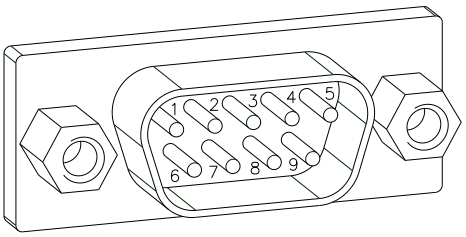

Figure 21

PIN (pin)	Input I
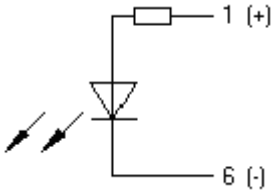	In 1 / Port 1: Print start
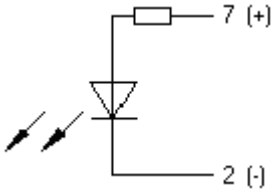	In 2 / Port 2: Not used
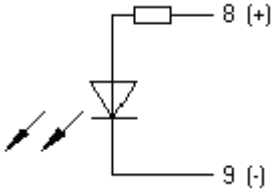	In 3 / Port 3: Reset external counter
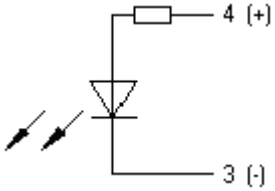	In 4 / Port 4: Not used

Example

Connection of a switch with 24V voltage supply by In 1 / Port 1:

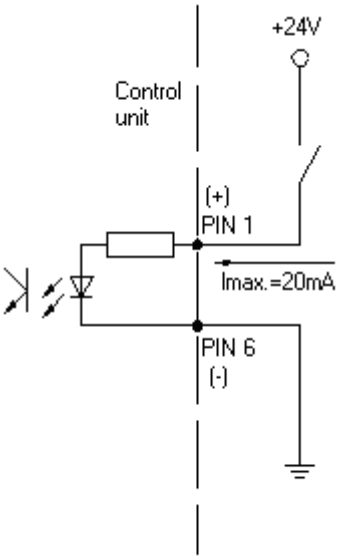

Figure 22

Input II
Figure 17, D

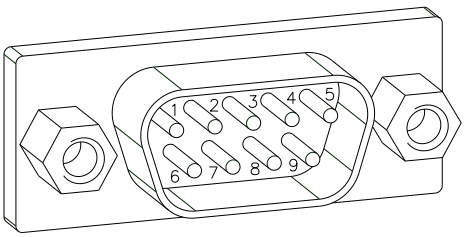

Figure 23

PIN (pin)	**Input II**
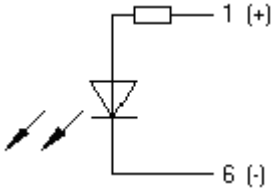	In 5 / Port 5: Not used
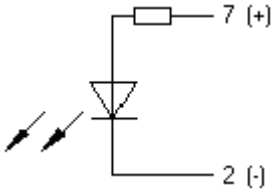	In 6 / Port 6: Not used
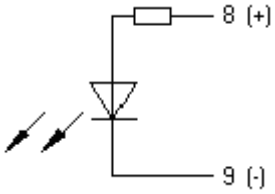	In 7 / Port 7: Not used
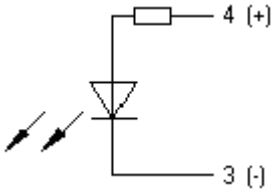	In 8 / Port 8: Not used

6.3 Registered Functions/Profiles for Inputs/Outputs

Select menu I/O Parameters / I/O Profile to select the desired profile.

List of registered functions for *Std_Direct*

Port	Function
1 (Input)	Print start
2 (Input)	Error reset
3 (Input)	Counter reset
4 (Input)	Release signal
5 (Input)	No function
6 (Input)	No function
7 (Input)	No function
8 (Input)	No function
9 (Output)	Error
10 (Output)	Active print order
11 (Output)	Generation
12 (Output)	Printing
13 (Output)	Ready
14 (Output)	Error
15 (Output)	Return
16 (Output)	Transfer ribbon prior warning

List of registered functions for *Std_Direct2*

Port	Function
1 (Input)	Print start
2 (Input)	Error reset
3 (Input)	Counter reset
4 (Input)	Release signal
5 (Input)	No function
6 (Input)	No function
7 (Input)	No function
8 (Input)	No function
9 (Output)	Error
10 (Output)	Ready
11 (Output)	Cassette open
12 (Output)	Printing
13 (Output)	Return
14 (Output)	Printhead down
15 (Output)	Print position
16 (Output)	Transfer ribbon prior warning

List of registered functions for *StdFileSelDirect*

Port	Function
1 (Input)	Print start
2 (Input)	Error reset
3 (Input)*	Number of the file to load Bit 0 (Input)
4 (Input)*	Number of the file to load Bit 1 (Input)
5 (Input)*	Number of the file to load Bit 2 (Input)
6 (Input)*	Number of the file to load Bit 3 (Input)
7 (Input)*	Number of the file to load Bit 4 (Input)
8 (Input)*	Number of the file to load Bit 5 (Input)
9 (Output)	Error
10 (Output)	Active print order
11 (Output)	Generation
12 (Output)	Printing
13 (Output)	Ready
14 (Output)	Error
15 (Output)	Return
16 (Output)	Transfer ribbon prior warning

* The files must be saved onto the CF card in the user directory.

The files must start with one or two digits (1_Etikett.prn, 02_Etikett.prn).

The files can be saved with a file extension.

In the printer status 'ready', 'waiting' or 'stop', a new file can be loaded. The printer order will be started after charging and an already existing printer order will be deleted.

The input signal 000000 does not charge a file and does not delete an already existing print order.

List of registered functions for *SP_Direct0*

Port	Function
1 (Input)	Print start
2 (Input)	Reset error
3 (Input)	Counter reset
4 (Input)	No function
5 (Input)	No function
6 (Input)	No function
7 (Input)	No function
8 (Input)	No function
9 (Output)	Ready
10 (Output)	No function
11 (Output)	No function
12 (Output)	No function
13 (Output)	Ready
14 (Output)	Error
15 (Output)	Return
16 (Output)	Transfer ribbon prior warning

List of registered functions for *Old_Direct0*

Port	Function
1 (Input)	Print start
2 (Input)	Reset error
3 (Input)	Counter reset
4 (Input)	No function
5 (Input)	No function
6 (Input)	No function
7 (Input)	No function
8 (Input)	No function
9 (Output)	Error
10 (Output)	Active print order
11 (Output)	Generation
12 (Output)	Printing
13 (Output)	Print-Ready
14 (Output)	Printhead down
15 (Output)	Return
16 (Output)	Transfer ribbon prior warning

6.4 Pin Assignment of Encoder Socket *

5-pin connecting bushing, contacts according to DIN 45322

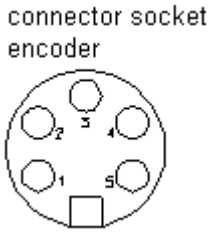

Figure 24

PIN1 = 5 VDC
PIN2 = Encoder signal (channel A)
PIN3 = Encoder signal (channel B)
PIN4 = GND

Electrical data of encoder

Operating voltage:	5 VDC
Output signal:	TTL level
Resolution:	Can be set at the print module

Connection of encoder

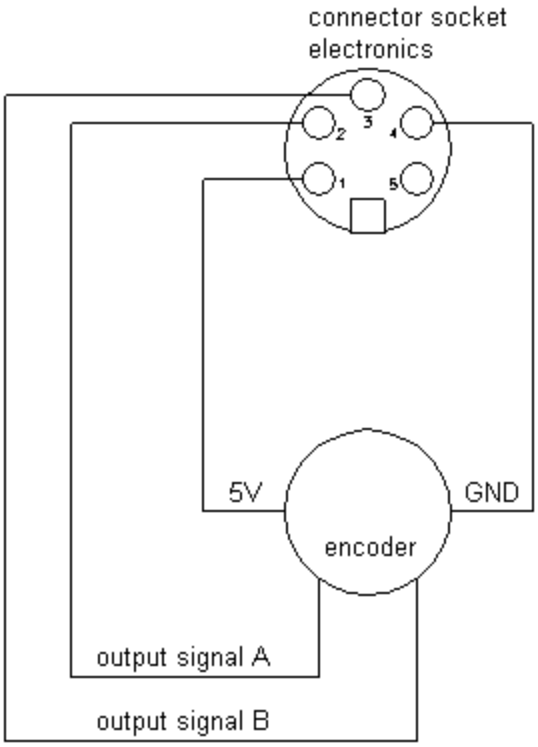

Figure 25

* only for continuous mode

7 Installation and Initial Operation

Unpack/pack the direct print module

CAUTION!

Danger of injury by imprudent handling when lifting or placing the printing system.

⇒ Do not underestimate the weight of the printing system (9 … 12 kg).

⇒ Protect the printing system against uncontrolled movement.

⇒ Lift the direct print module out of the box.

⇒ Check the direct print module for transport damages.

⇒ Remove the foam transportation safeguards near the printhead.

⇒ Check delivery for completeness.

Scope of delivery

- Print mechanics.
- Control unit with cable.
- Connecting cable.
- Mini controller.
- Manometer.
- Pneumatic tube.
- Push-on connector.
- I/O accessories (mating connector for I/Os).
- 1 transfer ribbon roll.
- Empty core, mounted on transfer ribbon rewinder.
- Cleaning foil for printhead.
- Documentation.
- CD with printer drivers.

NOTICE!

Retain the original packaging for subsequent transport.

7.1 Install the Print Mechanics at Machines

NOTICE!

With the open printing unit (due to construction) the requirements of EN 60950-1/EN 62368-1 regarding fire protection casing are not fulfilled. These must be ensured by the installation into the end device.

Installation with mounting frame

At the bottom of the mounting frame are two M8 threads that can be used for the attachment at the machine. Additionally multi-functional connecting parts are supplied.

Please observe the following conditions:

- The maximum thread engagement of the M8 threads is 10 mm.
- The print mechanics has to be installed with a distance from printhead to brake stator of 1 … 2.5 mm (see illustration).

  NOTICE!
  A distance of 2 mm is recommended.

- The best print results can be received if the silicon of the pressure roll consists of a hardness of approx. 40° … 50 ° Shore A and/or the elastometer of the counter-pressure plate shows a hardness of approx. 60 ± 5 Shore A (average value of roughness Ra ≥ 3,2 mm).
- The pressure roll/counter-pressure plate has to be installed parallel to the linear movement of the print unit and the focal line of the printhead. Discrepancies to the focal line and cavities in the print surface can lead to an inferior print quality at these positions.

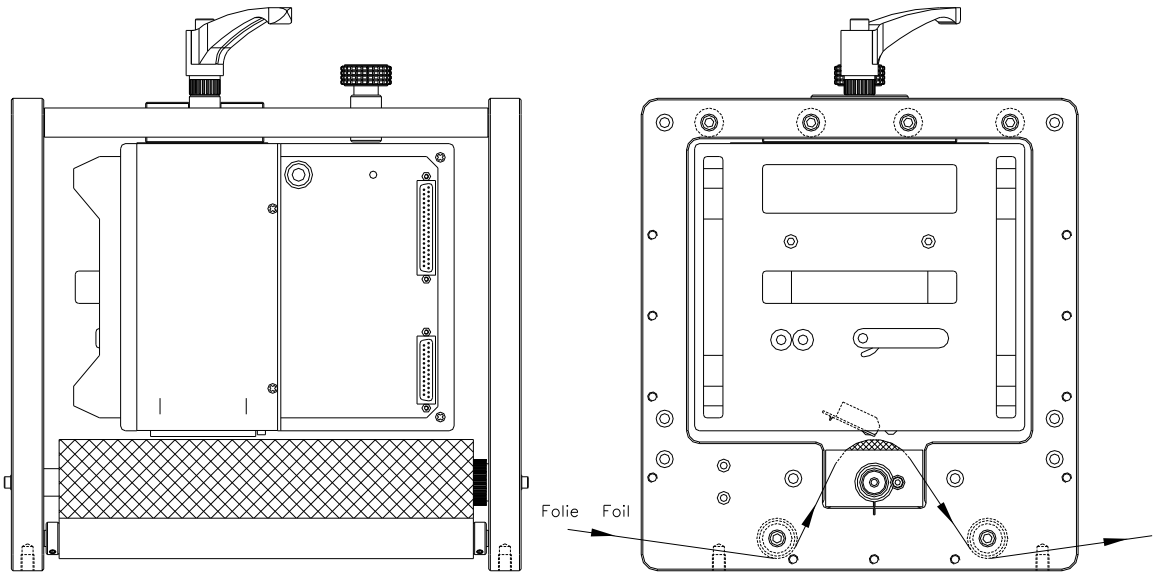

Figure 26

Installation without mounting frame

In case the machine is used without mounting frame, then fix the print module from the top with four M6 screws.

The maximum thread engagement of the M6 threads is 6 mm (position of printhead see illustration).

7.2 Required Space for Cable Outgoing

Standard:
Cable outgoing sideways

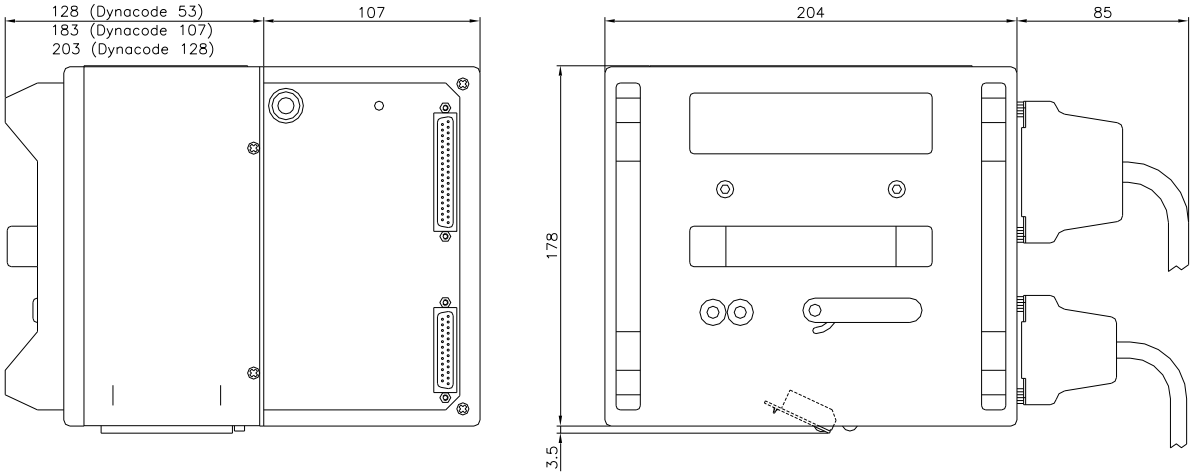

Figure 27

Option:
Cable outgoing behind

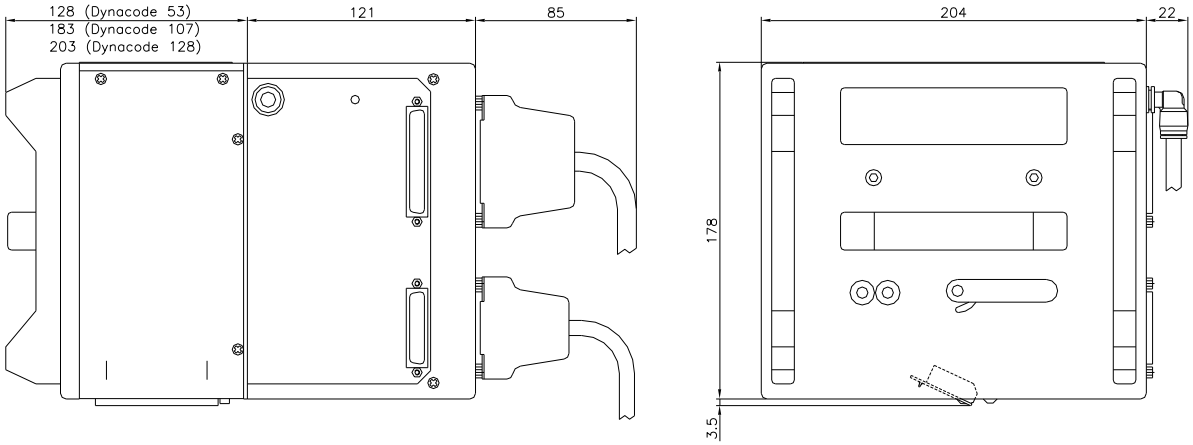

Figure 28

7.3 Connect the Pneumatic Power Supply

The pneumatic power supply for the printhead mechanics has to be made available a minimum continuous pressure of 4 … 6 bars in front of the pressure regulator. The maximum pressure in front of the pressure regulator is 7 bars and 4 bars after the pressure regulator.

NOTICE!

A pneumatic power supply of 4 bars is recommended.

The compressed-air has to be dry and oil free.

The supplied pressure regulator with manometer is to connect with a pneumatic tube Ø 8 mm via a plugging bolting to the pneumatic power supply. It is necessary to make a connection between the pressure regulator and the print mechanics via a pneumatic tube Ø 8 mm.

Please observe the following notes:

- Position the pressure regulator as near as possible to the print mechanics.
- The pressure regulator is only to operate in the direction that is indicated on its underside. The direction shows the way of the streaming air.
- It is not allowed to bend the pneumatic tubes.
- Shortening of the pneumatic tubes has to be made with a clean right-angled cut without squashing the tube. If necessary use special tools (available in pneumatic requirements).
- Please observe a possible short length of the 8 mm pneumatic tubes.

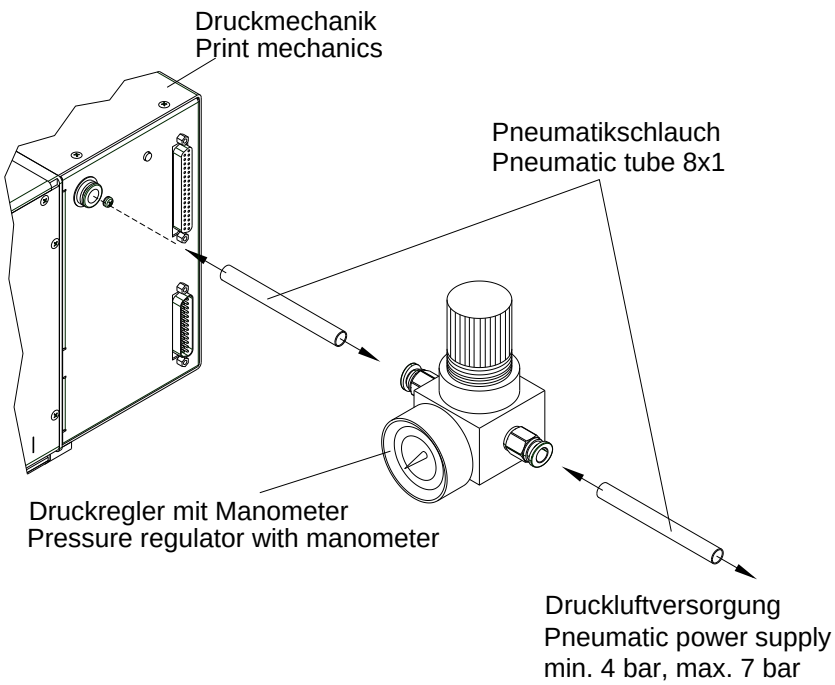

Figure 29

7.4 Adjust the Pressure Power

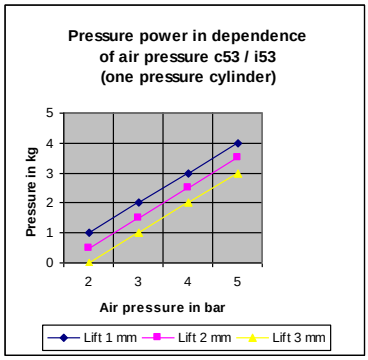

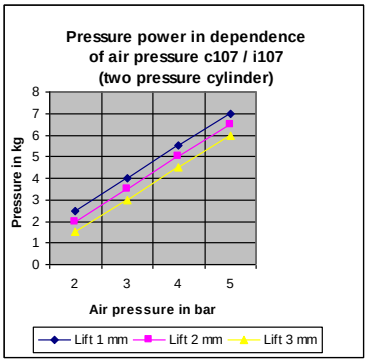

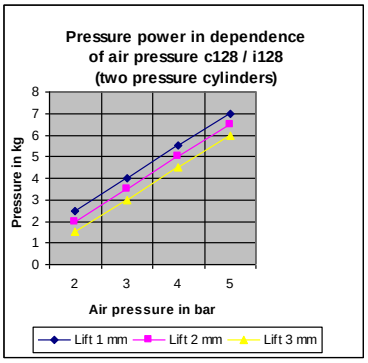

The pressure power of the printhead can be set with the pressure regulator. The values are indicated in the following table:

NOTICE!

If the pressure power is set too low then the printhead has no more contact to the counter-pressure plate. This damages the printhead due to the missing heat dissipation during the printout. In case of too low pressure an error message appears. This error message is to protect the printhead for overheating only and is not to use as print quality control (the control suffers with too low pressure, too).

The *Lift* indicates the distance between the printhead and counter-pressure plate in idle mode of the device.

	DC II 53	**DC II 107**	**DC II 128**
Recommended pressure power	40 N	40 N	40 N
Max. pressure power	45 N	45 N	45 N

As the mechanical wear and tear of the printhead increases with the pressure power, the pressure power should be as low as possible.

7.5 Connect the Direct Print Module

Connect to the power supply

The direct print module is equipped with a versatile power supply unit. The device may be operated with a mains voltage of 110 … 230 V AC 50 … 60 Hz without any adjustments or modifications.

CAUTION!

The direct print module can be damaged by undefined switch-on currents.

⇒ Set the power switch to '0' before plugging in the direct print module.

⇒ Insert the plug of power cable into a grounded electrical outlet.

Connect to a computer or to a computer network

NOTICE!

Insufficient or missing grounding can cause faults during operation.

Ensure that all computers and connection cables connected to the direct print module are grounded.

⇒ Connect the direct print module to a computer or network with a suitable cable.

7.6 Before Initial Operation

- Mount the print mechanics.
- Connect all cables between the print mechanics and control unit.
- Protect cables against unintentional unscrewing.
- Install the compressed air connection.
- Connect the control unit and PC by direct print module interface.
- Connect the control unit and packaging machine by inputs and outputs.
- Connect the power cable of control unit.

7.7 Print Control

As the direct print module is always in control mode, print orders can only be transmitted but not started via the existing interfaces (serial, parallel, USB or Ethernet). The print is started by a start signal to the ‘print start-control input’. So that the control unit detects when the start signal can be set, it is possible and mostly necessary to track the print status via the control outputs.

7.8 Initial Operation

⇒ After all connections are completed, switch on the control unit.

⇒ Insert the ribbon cassette (see chapter 8, page 45).
After loading the transfer ribbon cassette the measuring of transfer ribbon begins and the printhead is moved to the print position.

8 Load Transfer Ribbon Cassette

As for the electrostatic unloading the thin coating of the thermal printhead or other electronic parts can be damaged, the transfer ribbon should be antistatic.

The use of wrong materials can lead to direct print module malfunctions and the guarantee can expire.

NOTICE!

Before a new transfer ribbon roll is loaded, the printhead must be cleaned using the printhead and roller cleaner (97.20.002). For detailed information, please see page 128.
The handling instructions for the use of Isopropanol (IPA) must be observed. In the case of skin or eye contact, immediately wash off the fluid thoroughly with running water. If the irritation persists, consult a doctor. Ensure good ventilation.

8.1 Transfer Ribbon with Coating Outside

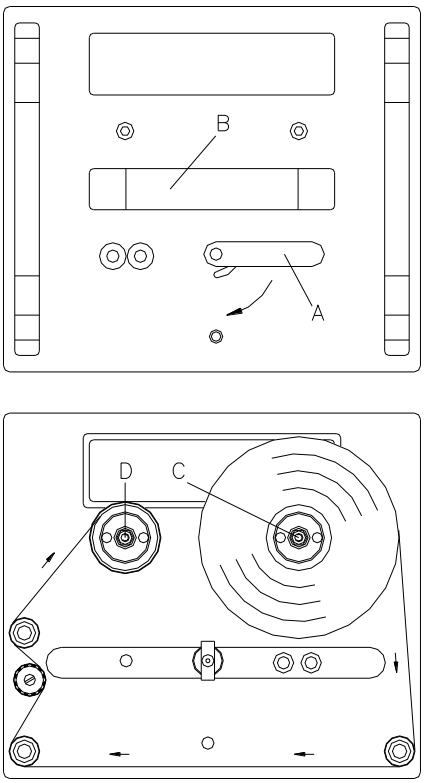

Figure 30

- Turn the lever (A) 90° in clockwise direction.
- Remove the ribbon cassette from the print mechanics by pulling handle (B).
- Load a new ribbon roll as far as it will go onto the unwinding roll (C).
- Load an empty cardboard roll as far as it will go onto the rewinding unit (D).
- Insert the ribbon according to illustration.
- Fix the ribbon with an adhesive tape at the empty roll and tighten it by some turns of the core.
- Push the ribbon cassette again onto print mechanics and take care that the ribbon not rip.
- Turn the lever (A) 90° anticlockwise.

NOTICE!

The above illustration shows a left hand printing system. If you are using a right hand system, then the new roll is to be inserted at the left and the cardboard core is to be inserted at the right side.

CAUTION!

Impact of static material on people!

⇒ Use antistatic transfer ribbon, because static discharge can occur when removing.

8.2 Transfer Ribbon with Coating Inside

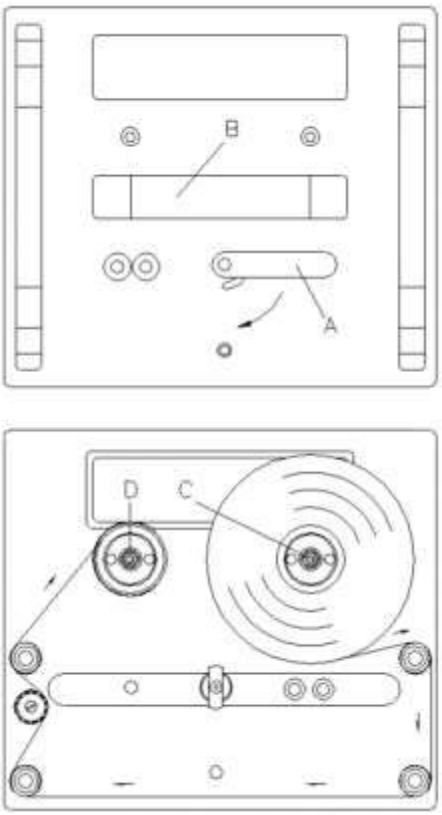

Figure 31

- Turn the lever (A) 90° in clockwise direction.
- Remove the ribbon cassette from the print mechanics by pulling handle (B).
- Load a new ribbon roll as far as it will go onto the unwinding roll (C).
- Load an empty cardboard roll as far as it will go onto the rewinding unit (D).
- Insert the ribbon according to illustration.
- Fix the ribbon with an adhesive tape at the empty roll and tighten it by some turns of the core.
- Push the ribbon cassette again onto print mechanics and take care that the ribbon not rips.
- Turn the lever (A) 90° anticlockwise.

NOTICE!

The above illustration shows a left hand printing system. If you are using a right hand system, then the new roll is to be inserted at the left and the cardboard core is to be inserted at the right side.

CAUTION!

Impact of static material on people!

⇒ Use antistatic transfer ribbon, because static discharge can occur when removing.

8.3 Increase the Clamping Force for Ribbon Roll

NOTICE!

The use of high-quality transfer ribbon with a cardboard core is recommended. A sample ribbon roll is included in the scope of delivery. The clamping force of transfer ribbon roll placed on the rewinding/unwinding unit is designed for this quality.

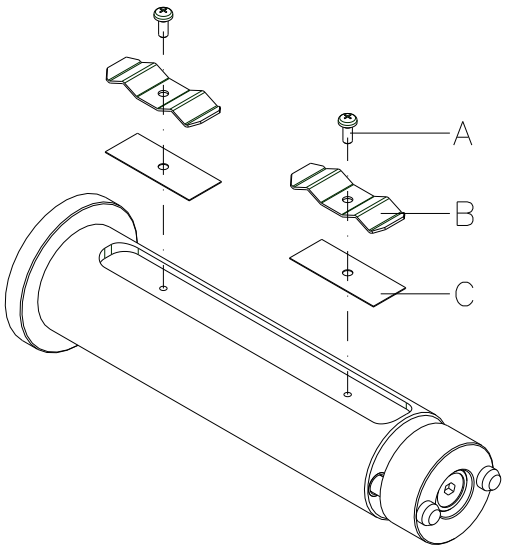

Figure 32

If other transfer ribbons are used, it can occur that the clamping force of the spring plates (B) is not sufficient, in order to position the rolls surely and to protect it against rotating.

When using transfer ribbons with plastic cores a safe positioning of the roles cannot be ensured.

CAUTION!

Slippage of transfer ribbon roll placed on the rewinding/ unwind unit or the empty cardboard core leads to malfunctions.

⇒ When using transfer ribbon rolls with plastic cores the groove must be shimmed.

Increase the clamping force

- Remove the screws (A) and spring plates (B).
- Insert the shims (C, included in delivery) into the groove.
- Fasten again the spring plates (B) and shims (C) with screws (A).
- Insert the transfer ribbon roll and empty cardboard core on the rewinding/unwinding unit.
  Check firm position!

9 Function Menu

9.1 Menu Structure (Continuous Mode)

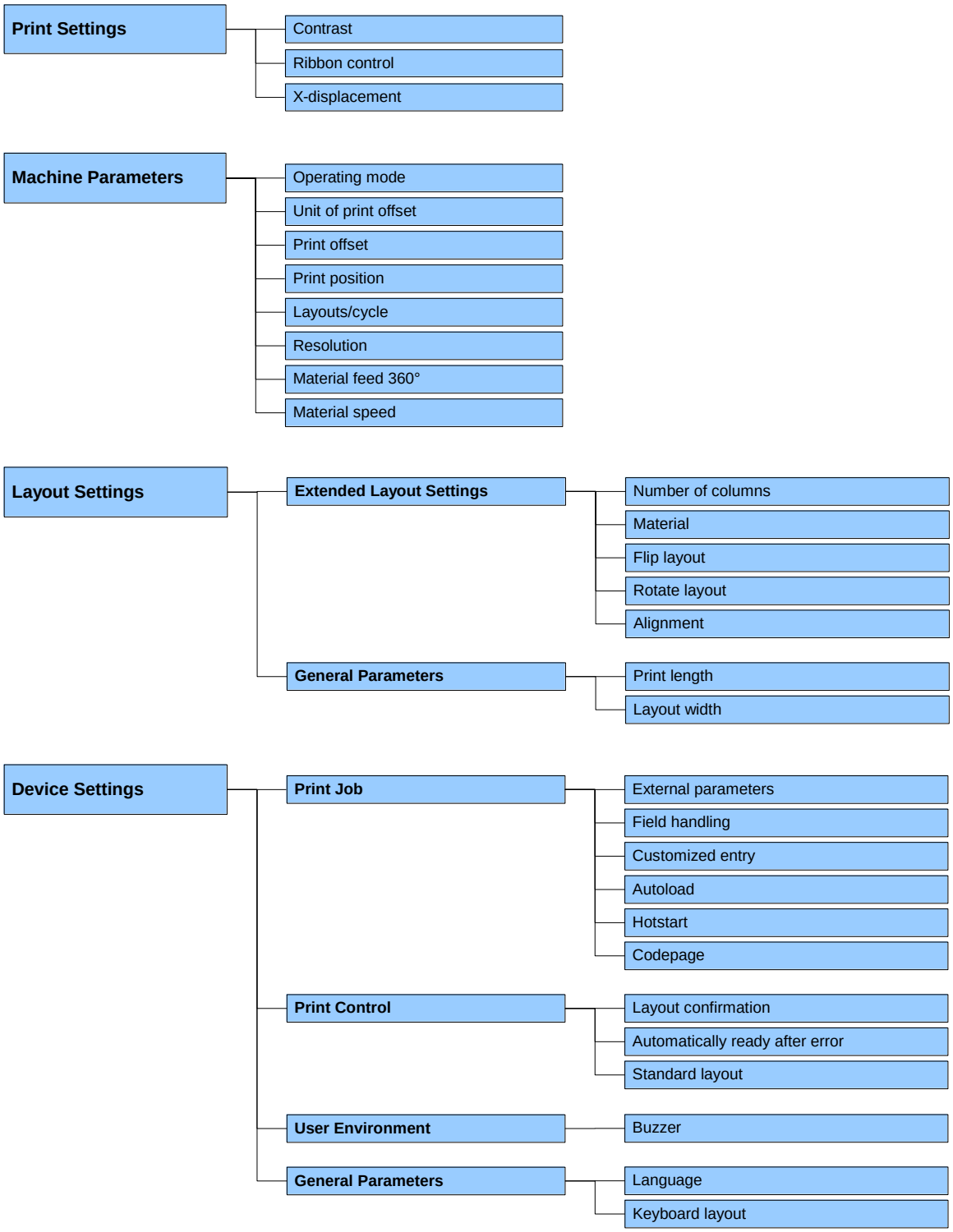

Export the latest menu structure from ConfigTool.
Printer settings --> Configuration --> Export

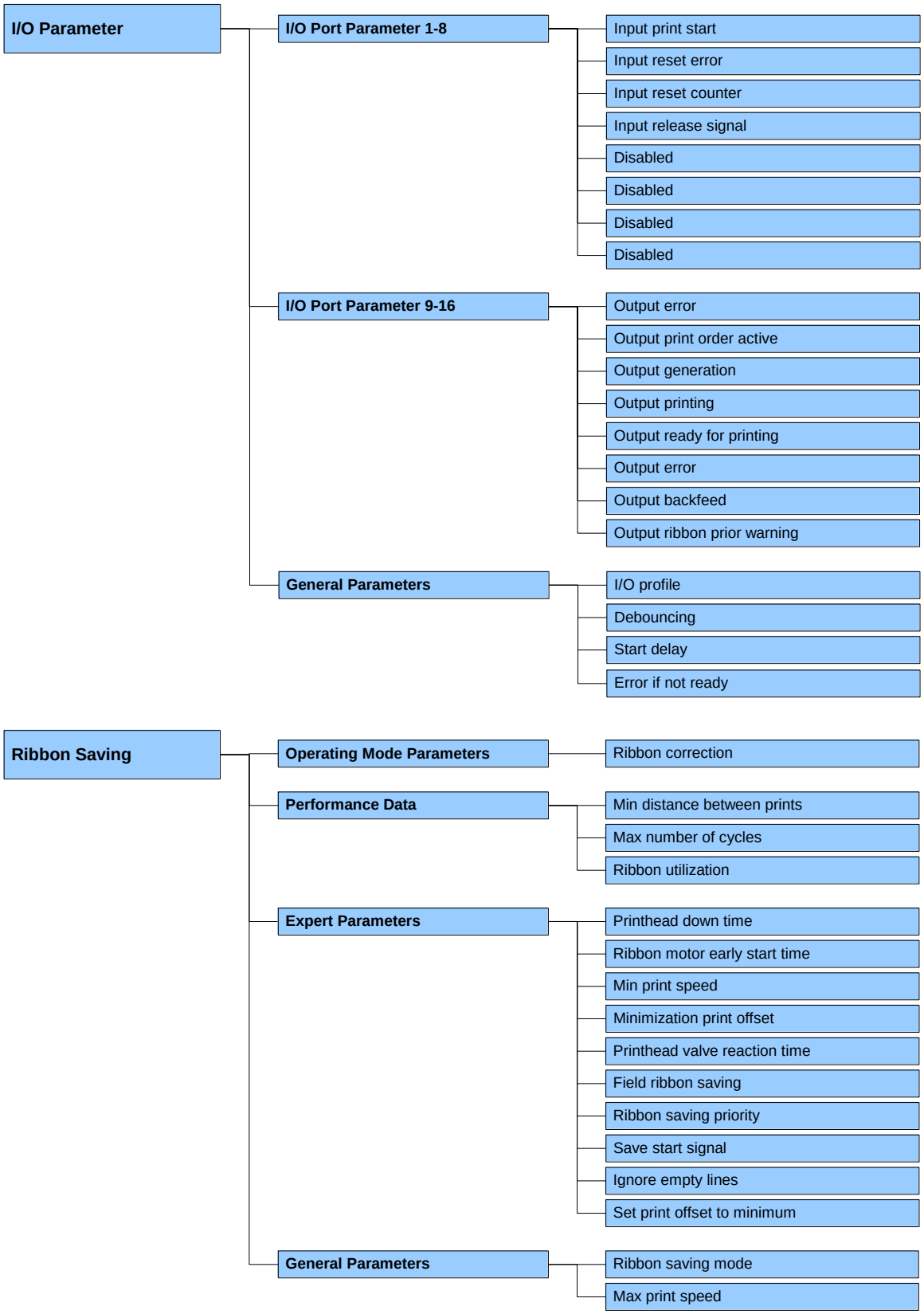
I/O Parameter
I/O Port Parameter 1-8
Input print start
Input reset error
Input reset counter
Input release signal
Disabled
Disabled
Disabled
Disabled
I/O Port Parameter 9-16
Output error
Output print order active
Output generation
Output printing
Output ready for printing
Output error
Output backfeed
Output ribbon prior warning
General Parameters
I/O profile
Debouncing
Start delay
Error if not ready
Ribbon Saving
Operating Mode Parameters
Ribbon correction
Performance Data
Min distance between prints
Max number of cycles
Ribbon utilization
Expert Parameters
Printhead down time
Ribbon motor early start time
Min print speed
Minimization print offset
Printhead valve reaction time
Field ribbon saving
Ribbon saving priority
Save start signal
Ignore empty lines
Set print offset to minimum
General Parameters
Ribbon saving mode
Max print speed

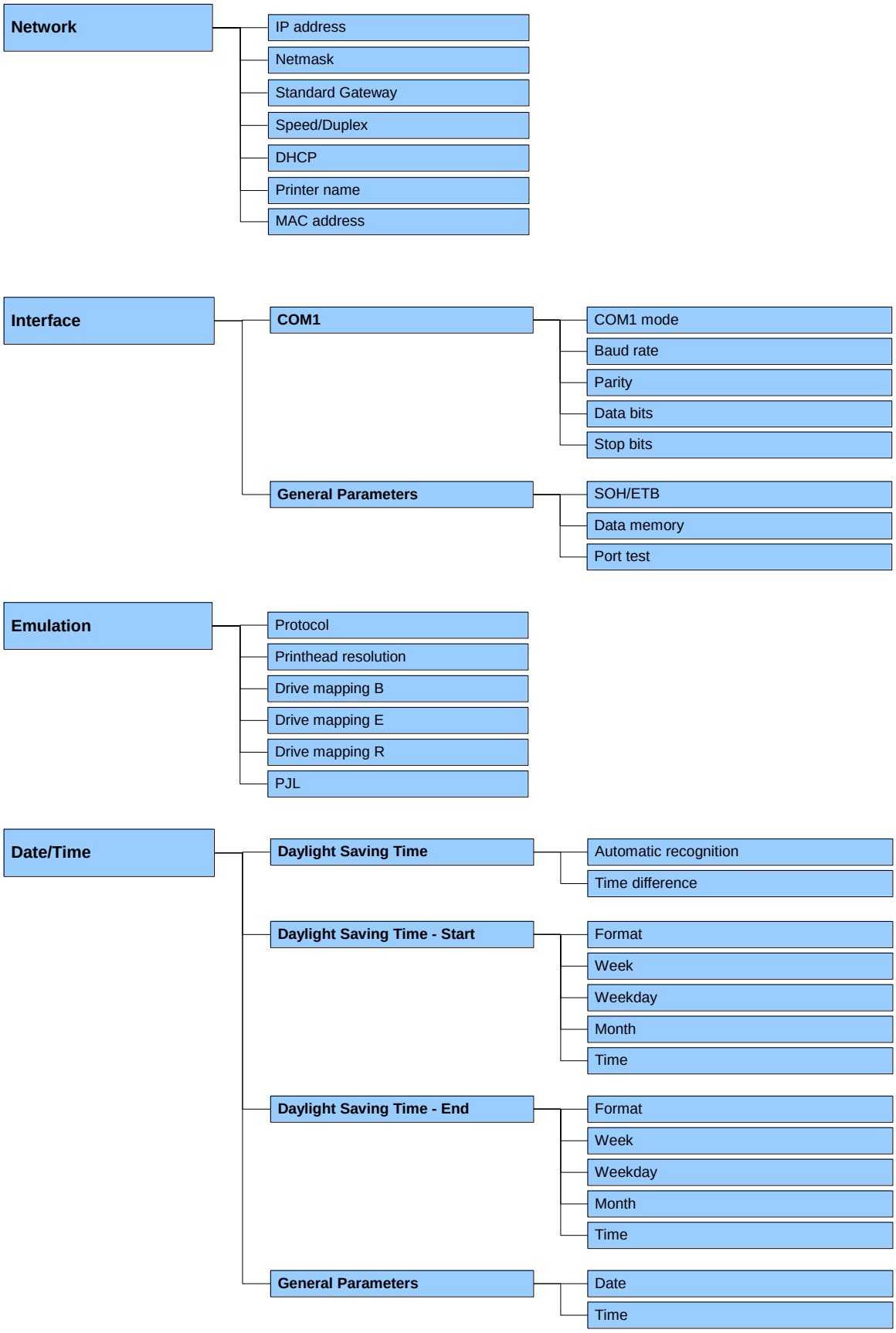
Network
IP address
Netmask
Standard Gateway
Speed/Duplex
DHCP
Printer name
MAC address
Interface
COM1
COM1 mode
Baud rate
Parity
Data bits
Stop bits
General Parameters
SOH/ETB
Data memory
Port test
Emulation
Protocol
Printhead resolution
Drive mapping B
Drive mapping E
Drive mapping R
PJL
Date/Time
Daylight Saving Time
Automatic recognition
Time difference
Daylight Saving Time - Start
Format
Week
Weekday
Month
Time
Daylight Saving Time - End
Format
Week
Weekday
Month
Time
General Parameters
Date
Time

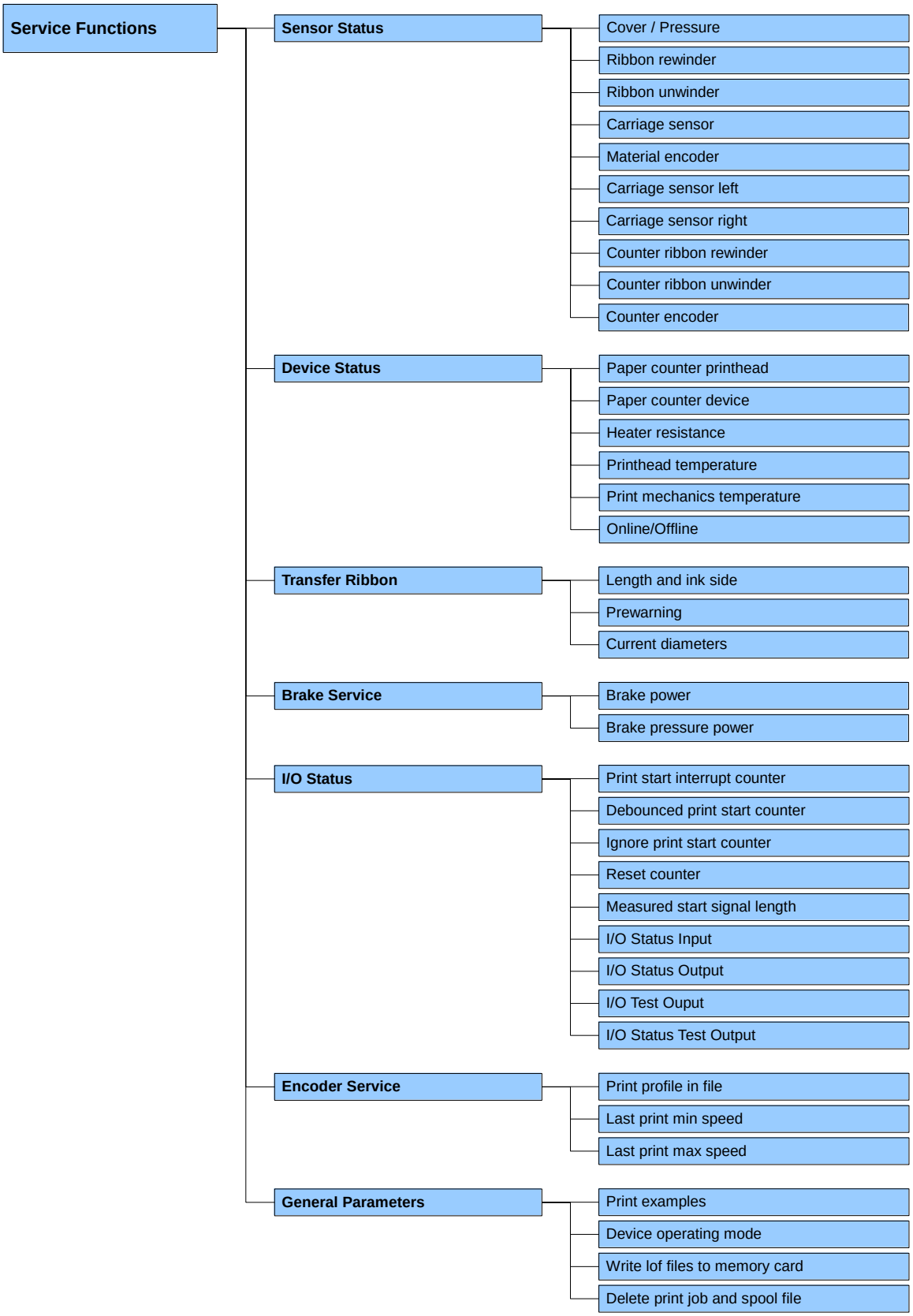
Service Functions
Sensor Status
Cover / Pressure
Ribbon rewinder
Ribbon unwinder
Carriage sensor
Material encoder
Carriage sensor left
Carriage sensor right
Counter ribbon rewinder
Counter ribbon unwinder
Counter encoder
Device Status
Paper counter printhead
Paper counter device
Heater resistance
Printhead temperature
Print mechanics temperature
Online/Offline
Transfer Ribbon
Length and ink side
Prewarning
Current diameters
Brake Service
Brake power
Brake pressure power
I/O Status
Print start interrupt counter
Debounced print start counter
Ignore print start counter
Reset counter
Measured start signal length
I/O Status Input
I/O Status Output
I/O Test Ouput
I/O Status Test Output
Encoder Service
Print profile in file
Last print min speed
Last print max speed
General Parameters
Print examples
Device operating mode
Write lof files to memory card
Delete print job and spool file

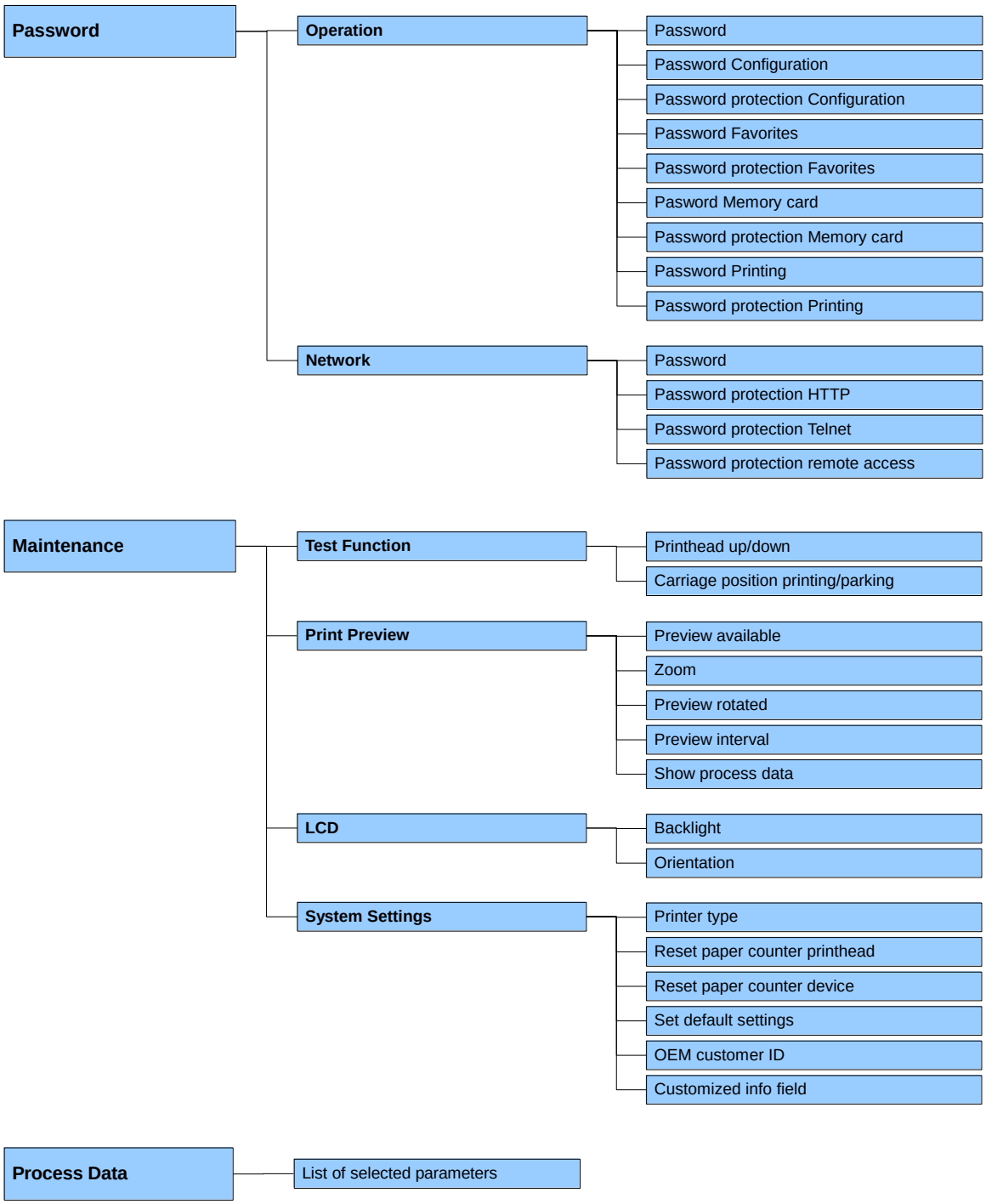
Password
Operation
Password
Password Configuration
Password protection Configuration
Password Favorites
Password protection Favorites
Pasword Memory card
Password protection Memory card
Password Printing
Password protection Printing
Network
Password
Password protection HTTP
Password protection Telnet
Password protection remote access
Maintenance
Test Function
Printhead up/down
Carriage position printing/parking
Print Preview
Preview available
Zoom
Preview rotated
Preview interval
Show process data
LCD
Backlight
Orientation
System Settings
Printer type
Reset paper counter printhead
Reset paper counter device
Set default settings
OEM customer ID
Customized info field
Process Data
List of selected parameters

9.2 Menu Structure (Intermittent Mode)

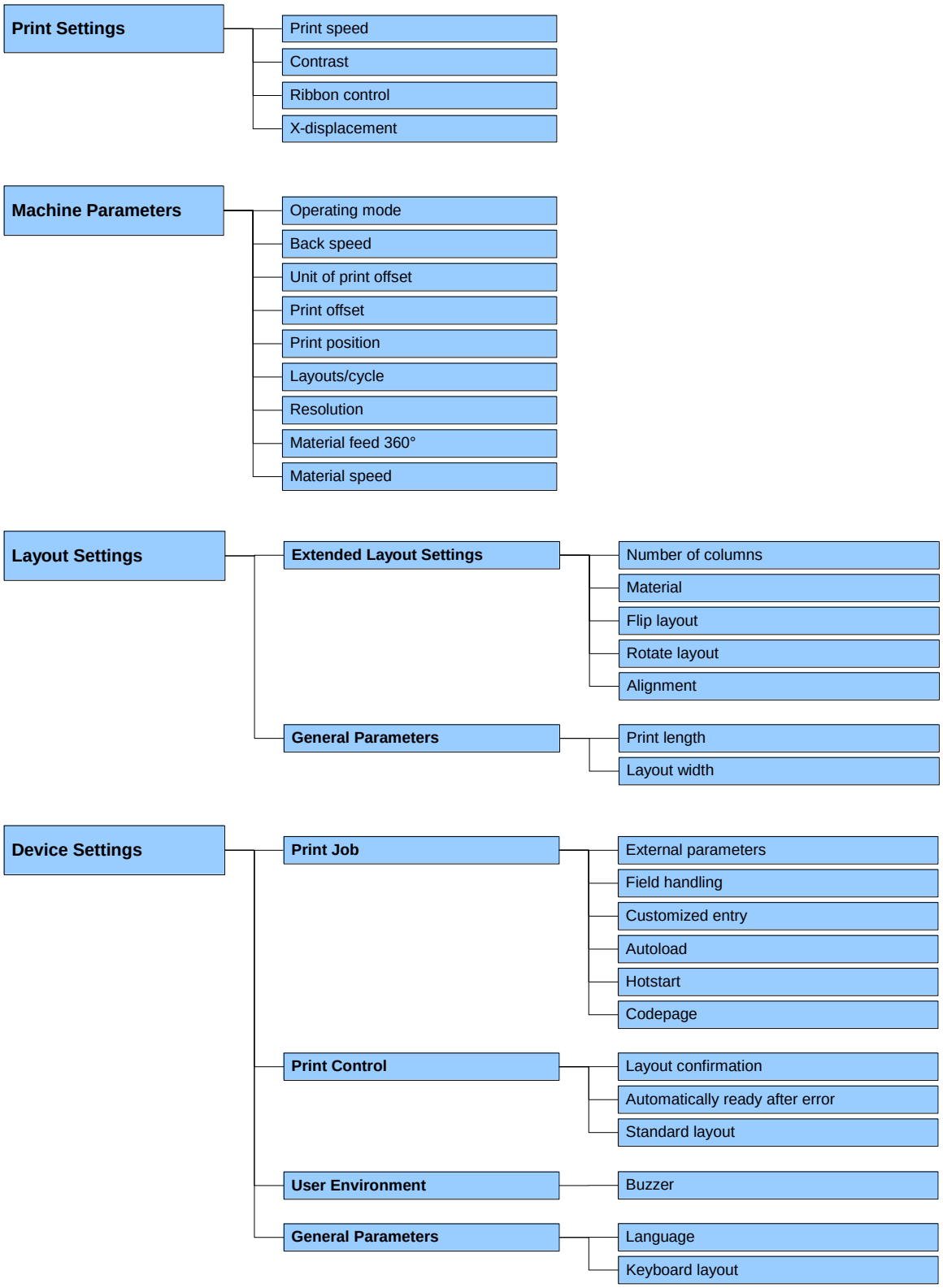

Export the latest menu structure from ConfigTool.
Printer settings --> Configuration --> Export

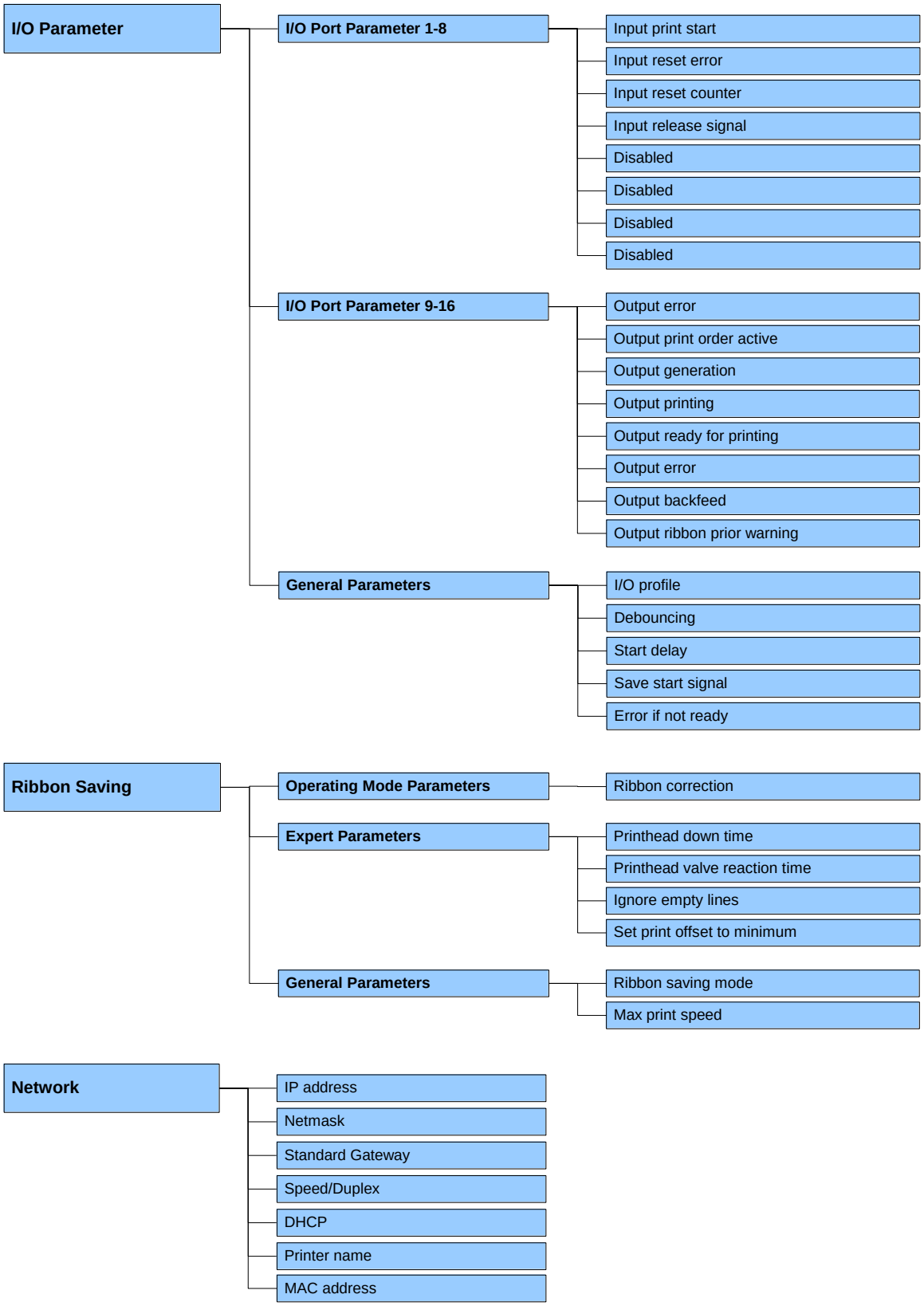
I/O Parameter
I/O Port Parameter 1-8
Input print start
Input reset error
Input reset counter
Input release signal
Disabled
Disabled
Disabled
Disabled
I/O Port Parameter 9-16
Output error
Output print order active
Output generation
Output printing
Output ready for printing
Output error
Output backfeed
Output ribbon prior warning
General Parameters
I/O profile
Debouncing
Start delay
Save start signal
Error if not ready
Ribbon Saving
Operating Mode Parameters
Ribbon correction
Expert Parameters
Printhead down time
Printhead valve reaction time
Ignore empty lines
Set print offset to minimum
General Parameters
Ribbon saving mode
Max print speed
Network
IP address
Netmask
Standard Gateway
Speed/Duplex
DHCP
Printer name
MAC address

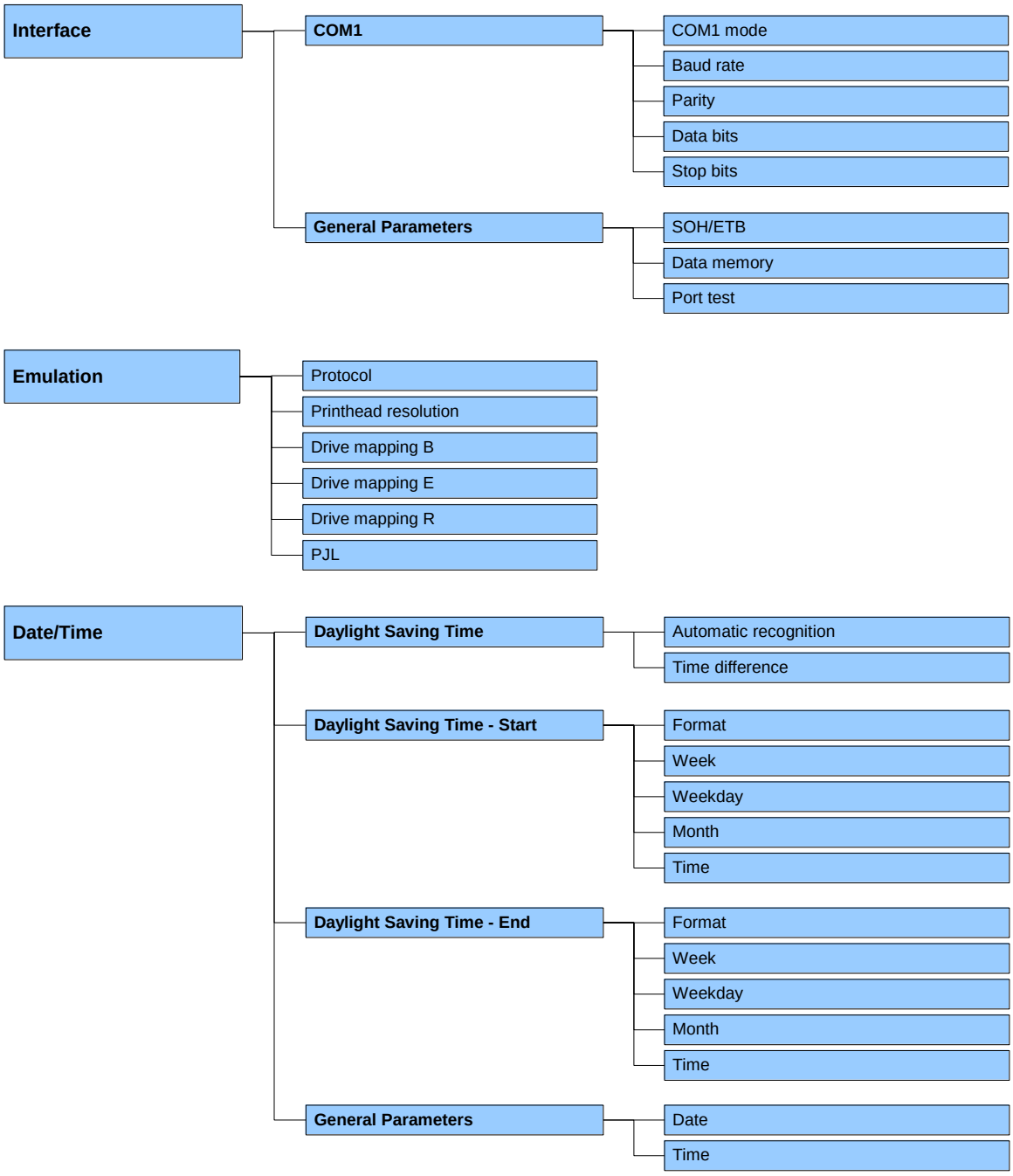
Interface
COM1
COM1 mode
Baud rate
Parity
Data bits
Stop bits
General Parameters
SOH/ETB
Data memory
Port test
Emulation
Protocol
Printhead resolution
Drive mapping B
Drive mapping E
Drive mapping R
PJL
Date/Time
Daylight Saving Time
Automatic recognition
Time difference
Daylight Saving Time - Start
Format
Week
Weekday
Month
Time
Daylight Saving Time - End
Format
Week
Weekday
Month
Time
General Parameters
Date
Time

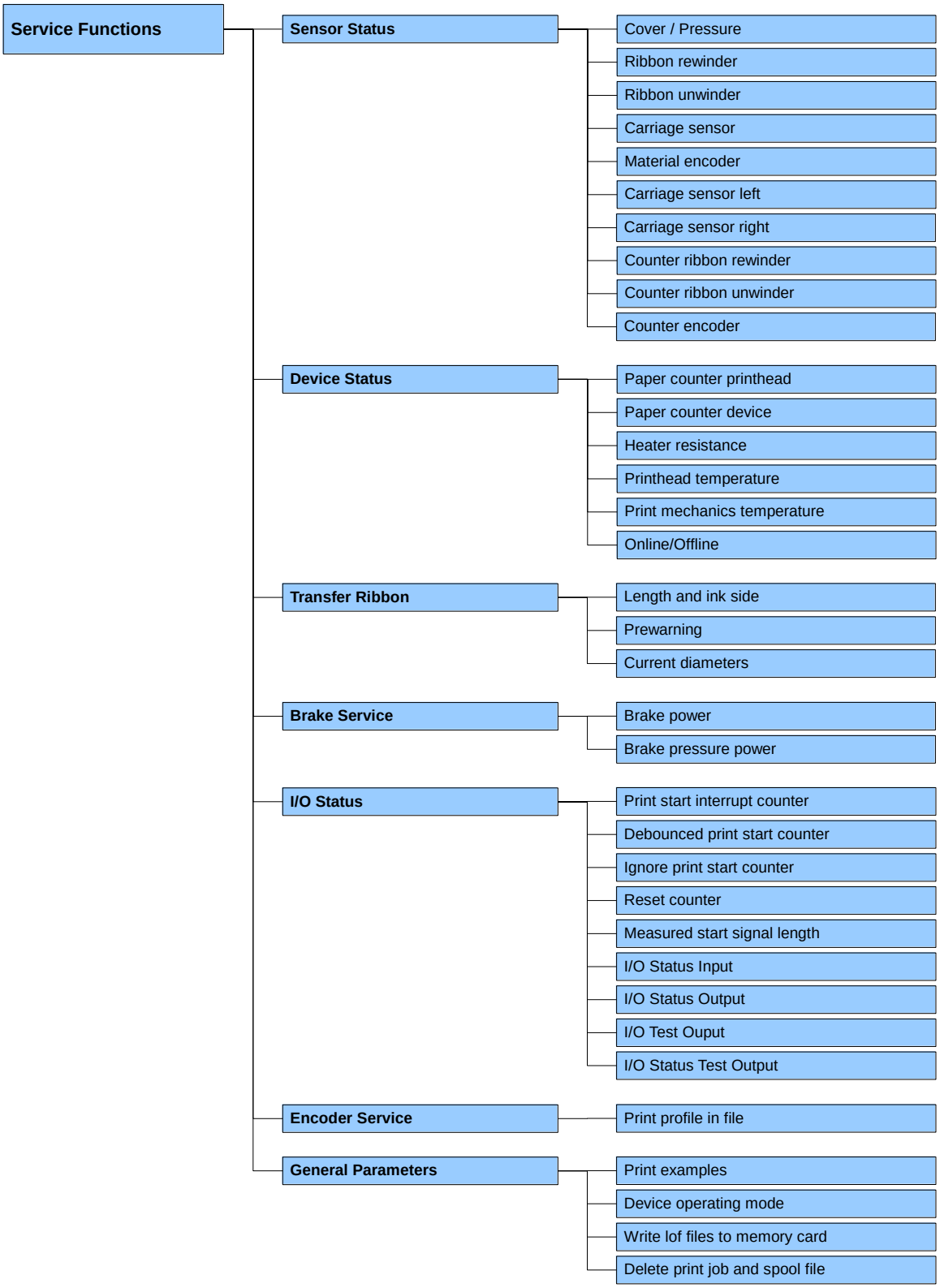
Service Functions
Sensor Status
Cover / Pressure
Ribbon rewinder
Ribbon unwinder
Carriage sensor
Material encoder
Carriage sensor left
Carriage sensor right
Counter ribbon rewinder
Counter ribbon unwinder
Counter encoder
Device Status
Paper counter printhead
Paper counter device
Heater resistance
Printhead temperature
Print mechanics temperature
Online/Offline
Transfer Ribbon
Length and ink side
Prewarning
Current diameters
Brake Service
Brake power
Brake pressure power
I/O Status
Print start interrupt counter
Debounced print start counter
Ignore print start counter
Reset counter
Measured start signal length
I/O Status Input
I/O Status Output
I/O Test Ouput
I/O Status Test Output
Encoder Service
Print profile in file
General Parameters
Print examples
Device operating mode
Write lof files to memory card
Delete print job and spool file

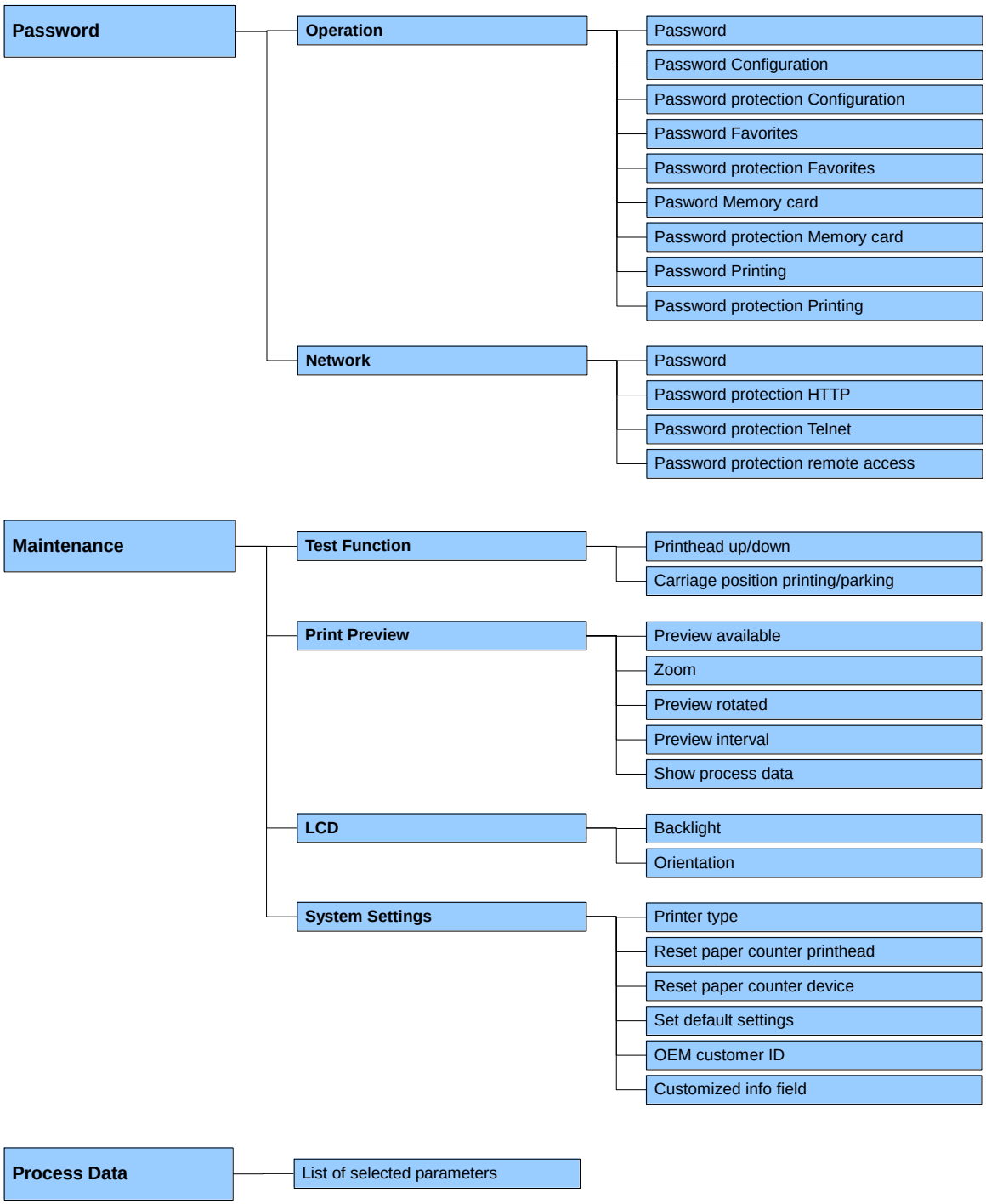
Password
Operation
Password
Password Configuration
Password protection Configuration
Password Favorites
Password protection Favorites
Pasword Memory card
Password protection Memory card
Password Printing
Password protection Printing
Network
Password
Password protection HTTP
Password protection Telnet
Password protection remote access
Maintenance
Test Function
Printhead up/down
Carriage position printing/parking
Print Preview
Preview available
Zoom
Preview rotated
Preview interval
Show process data
LCD
Backlight
Orientation
System Settings
Printer type
Reset paper counter printhead
Reset paper counter device
Set default settings
OEM customer ID
Customized info field
Process Data
List of selected parameters

9.3 Print Settings

Speed (intermittent mode only)

Indication of print speed in mm/s (see Technical Data, page 21). The print speed can be determined for each print order anew.
The setting of print speed affects also the test prints.
Value range: 50 … 600 mm/s
Step size: 10 mm/s

Contrast

Indication of value to set the print intensity when using different materials, print speeds or printing contents.
Value range: 10 % … 200 %.
Step size: 10 %

Ribbon control

Examination if the transfer ribbon roll is empty and/or if the ribbon was torn at the unwinding roll. The current print order is interrupted and an Error Message appears at the printer display.

Off: The ribbon control is deselected, i.e. the printer continues without an error message.

On, weak sensibility (default): The printer reacts at approx. 1/3 more slowly to the end of the transfer ribbon.

On, strong sensibility: The printer reacts immediately to the end of the transfer ribbon.

X displacement

Displacement of the complete print transverse to the paper direction. The displacement is possible only up to the edges of the printing zone and is determined by the width of the focal line in printhead.
Value range: −90.0 … +90.0.

9.4 Machine Parameters (Continuous Mode)

Operating mode

The print procedure cannot be started via the interface. The machine is always in control mode and the print is released by the control input *Print Start*. The operating mode is normally transferred with each layout otherwise mode *I/O dynamic continuous* is used as standard operating mode.
The following modes are available:

IO static:
The input signal is evaluated, i.e. it is printed as long as the signal exists. The number of layouts, which was entered at print start, is printed (level evaluation of print start signal).

IO static continuous:
Corresponds to IO static. Continuous means that not only a defined number of pieces is processed but the same layout is printed as long as new data is transferred by interface.

IO dynamic:
The external signal is evaluated dynamically, i.e. in case the direct print module is in 'waiting' mode a single layout is printed at each signal changing (flank evaluation of print start signal).

IO dynamic continuous:
Corresponds to IO dynamic. Continuous means that not only a defined number of pieces is processed but the same layout is printed as long as new data is transferred by interface.

Test mode:
This operating mode corresponds to mode 2. After the return of the print unit to the zero point of the machine, however, internally a further cycle is started (endurance test).

Direct start:
A print order is transferred. After termination of generating process the print order is executed without an external signal.

Unit of print offset

Selection for the unit of print offset.
Settings possible either in mm or ms.

Print offset

Indication of distance of the layout (res. the first layout in case more layouts per cycles are to be printed) to the zero point of machine.

Settings possible either in mm or ms.
Value range: 1 … 999 mm

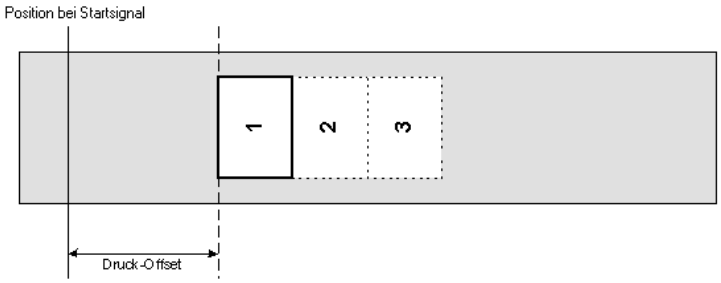

Print position

Indication of position of print carriage in mm.
Value range: 12 … 93 mm

Layouts/cycle

Indication of number of printed layouts per print start (cycle).
Value range: 1 … 25.

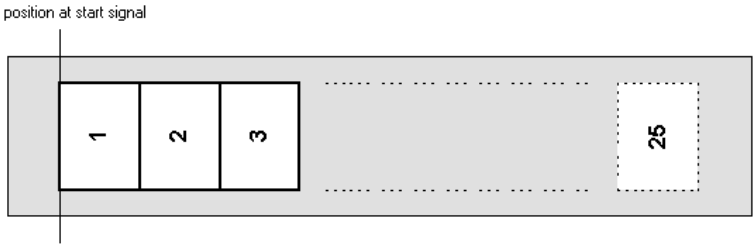

Resolution

Indication of resolution of used encoder.

Material feed 360 degrees

Indication of material feed per rotation of encoder in mm. These settings help measuring the material speed.
The material feeding per encoder rotation corresponds for instance, in a 1:1 translation between the encoder and the roller, to the roller circumference.

Material speed

Indication of material speed in mm/s (only for reading purposes).
Value range: 12 … 93 mm/s

9.5 Machine Parameters (Intermittent Mode)

Operating mode

Number of pieces:
A print order with a defined number of pieces is transferred. After the generating process the target number and the actual number of pieces is shown in the display. A cycle is started via signal input 1. With each cycle the actual number of pieces is increased by the number of printed layouts. In case the target number of pieces is reached the print order is finished and the display shows again the main menu.

Continuous:
A print order is transferred. After the generating process the number of printed layouts is shown in the display. A cycle is started via signal input 1. With each cycle the number of printed layouts is increased. The print order is active as long as it is terminated by the user or in case of new data transmission.

Test mode:
This operating mode corresponds to mode 2. After the return of the print unit to the zero point of the machine, however, internally a further cycle is started (endurance test).

Direct start:
A print order is transferred. After termination of generating process the print order is executed without an external signal.

Back speed

Indication of back speed of print mechanics after print end in mm/s. Each cycle of the machine consists of printing and return to the zero point of machine. The print speed and back speed can be set separately.
Because of this value you can select for low machine clock cycles an operating method which saves the material and increases in this way the life of the printhead.

Because of the mass moment of inertia it could be better to reduce the speed at an installation position of the print unit at >30° horizontal.
Value range: 50 … 800 mm/s.

Unit of print offset

Selection for the unit of print offset.
Settings possible either in mm or ms.

Print offset

Indication of distance of the layout (res. the first layout in case more layouts per cycles are to be printed) to the zero point of machine.
Value range: 0 … 93 mm
Default: 0 mm

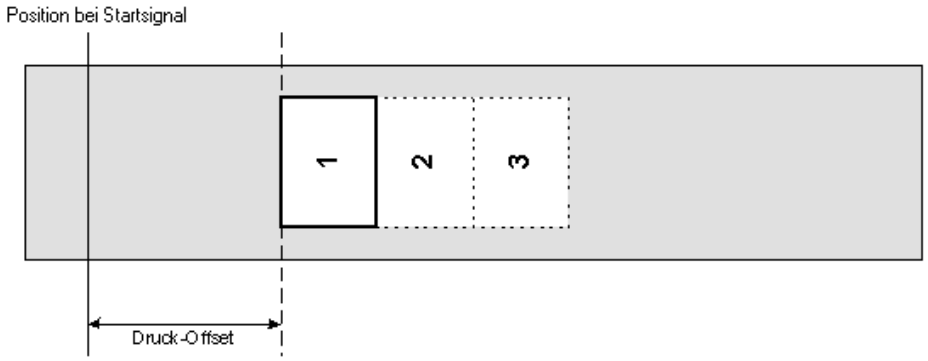

Print position

Indication of start position of print carriage in mm.
Value range: 0 … 93 mm
Default: 83 mm

Layouts/cycle

Indication of the number of printed layouts per print start (cycle).
Value range: 1 … 25.

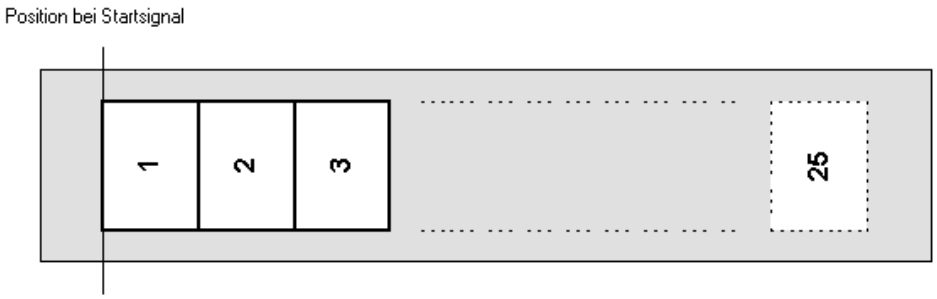

9.6 Layout

9.6.1 Layout Settings

Number of columns

Indication of width of one layout as well as how many layouts are placed side by side on the backing paper.
With this print module, several columns can be printed, i.e. the information of one column can be printed several times (depending on its width) on a layout. Caused by this the use of the complete print width is possible and the generating time is enormously reduced.

Material

Selection of the used transfer ribbon material.

Flip layout

The axis of reflection is in the middle of the layout. If the layout width was not transferred to the direct print module, automatically the default layout width i.e. the width of the printhead is used. It is recommended to use layouts with the same width as the printhead. Otherwise this can cause problems in positioning.

Rotate layout

According to standard the layout is printed ahead with a rotation of 0°. If the function is activated, the layout is rotated by 180° and printed in reading direction.

Alignment

The adjustment of layout is effected only after *Flip/Rotate layout*, i.e. the adjustment is independent of the functions *Flip layout* and *Rotate layout*.

Left = The layout is aligned at the left-most position of printhead.

Centre = The layout is aligned at central point of printhead.

Right = The layout is aligned at right-most position of printhead.

9.6.2 General Parameters

Print length

Indication of the print length in mm.
Indication of way the print mechanics has to move. The print length depends on the length of the print mechanics.

Layout width

Indication of the layout width in mm.

9.7 Device Settings

9.7.1 Print Job

External parameters

Layout dimension only: The parameters for layout length, gap length and layout width can be transferred to the printing system. All other parameter settings are to be made directly at the printing system.
On: Sending parameters such as speed and contrast via our design software to the printing system. Parameters which are set directly at the printing system before are no longer considered.
Off: Only settings made directly at the printing system are considered.

Field handling

Off: The complete print memory is deleted.
Keep graphic: A graphic res. a TrueType font is transferred to the direct print module once and stored in the direct print module internal memory. For the following print order only the modified data is transferred to the direct print module. The advantage is the saving of transmitting time for the graphic data.
The graphic data created by the direct print module itself (internal fonts, bar codes, ...) is generated only if they were changed. The generating time is saved.
Delete graphic: The graphics res. TrueType fonts stored in the internal memory is deleted but the other fields are kept.
Restore graphic: At the end of the print order the printed order can again be started at the direct print module. All graphics and TrueType fonts are again printed.
Exception: With column printing always full columns must be printed (number of pieces always multiple of the columns). Deleted columns are not restored.

Customized entry

Off: No question appears at the display. In this case the stored default value is printed.

On: The question referring the customized variable appears once before the print start at the display.

Auto: The questions referring the customized variable and the quantity query appear after every printed layout.

Auto without quantity query: The question referring the customized variable appears after every layout without additional query for the quantity.

Autoload

On: A layout loaded once from CF card, can be reloaded after a restart of the printing system automatically.

Procedure: The used layout is saved onto CF card. The layout is loaded from CF card and printed. After switching the printing system Off and again On, the layout is loaded from CF card automatically and can be printed again.

NOTICE!

The last loaded label from CF card is always again loaded after a restart of printer.

Off: After a restart of printer the last used label must be again loaded manually from CF card.

NOTICE!

A common use of the functions Autoload and Hotstart is not possible. For a correct Autoload procedure the Hotstart must be deactivated in the printer.

Hotstart

On: Continue an interrupted print order after switching on the printer anew
Off: No question appears at the display. In this case the stored default value is printed 14.1, page 151).

Codepage

Indication of the font used in the direct print module.
The following possibilities are available:

Codepage 1252 West European (former ANSI)

Codepage 437 English

Codepage 850 Western European

Codepage 852 Slavic

Codepage 857 Turkish

Codepage 1250 Central and East European

Codepage 1251 Cyrillic

Codepage 1253 Greek

Codepage 1254 Turkish

Codepage 1257 Baltic

WGL4

Please find the tables referring to the above mentioned character sets on www.carl-valentin.de/Downloads.

9.7.2 Print Control

Layout confirmation

On: A new print order is only printed after confirmation at the device. An already active continuing print order is printed as long as the confirmation is effected at the device.
Off: No query appears at the display of control unit.

Auto ready after error

On: If an error occurred during printing, whose removal can be recognized by the module (e.g. transfer ribbon end, cassette open), then the module changes after the error correction (e.g. cassette closed again) immediately in the 'ready' mode.
Off: After removal and confirmation of error, the module changes into 'stopped' mode.

Standard layout

On: If a print order is started without previous definition of layout, the standard layout is printed.

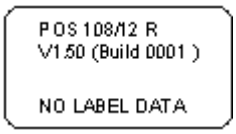

Off: If a print order is started without previous definition of layout, an error message appears in the display.

9.7.3 User Environment

Buzzer

On (1-7): An acoustic signal is audible when pressing a key.
Off: No signal is audible.

9.7.4 General Parameters

Language

Selection of language the display indicates texts in the graphic display. At the moment the following languages are available: German, English, French, Spanish, Finnish, Czech, Portuguese, Dutch, Italian, Danish, Polish, Greek, Hungarian, Russian, Chinese (option), Ukrainian, Turkish, Swedish, Norwegian.

Keyboard layout

Selection of region for the desired keyboard layout.
The following possibilities are available: German, English, French, Greek, Spanish, Swedish, US, Russian.

9.8 I/O Parameters

9.8.1 I/O Port Parameter 1-8

Input print start

Input reset error

Input reset counter

Input external print release (default: disabled)

Disabled

Disabled

Disabled

Disabled

9.8.2 I/O Port Parameter 9-16

Output error

Output print order active

Output generation

Output printing

Output ready

Output error

Output backfeed

Output ribbon prior warning

9.8.3 General Parameters

I/O profil

Selection of the available confiruration *Std_Direct* (factory setting), *Std_Direct2*, *StdFileSelDirect, SP_Direct0* or *Old_Direct0*.

The corresponding assignment is indicated in chapter 6.3, page 32.

Debounce

Indication of debounce time of the dispenser input. The setting range of the debounce time is between 0 and 100 ms.
In case the start signal is not clear then you can debounce the input by means of this menu item.

Start signal delay

Indication in time per second of the delay for the start signal.
Value range: 0.00 … 9.99.

Save signal (intermittent mode only)	**On:** The start signal for the next layout can already be released during printing the current layout. The signal is registered from the printing system. The printing system starts printing the next layout immediately after finishing the current one. Therefore time can be saved and performance be increased. **Off:** The start signal for the next layout can only be released if the current layout is printed to the end and the printing system is again in 'waiting' state (output 'ready' set). If the start signal was released already before, so this is ignored.
Not ready: error	**On:** If a print order is active but the direct print module is not ready to process the order (e.g. if it is already in 'printing' mode), then an error message appears. **Off:** No error message appears. **Speed only:** If the print speed falls below the minimum, an error message is displayed.

9.9 Ribbon Saving / Foil Saving

Layout

Ribbon saving = maximum utilisation of transfer ribbon

Transfer ribbon without ribbon saving

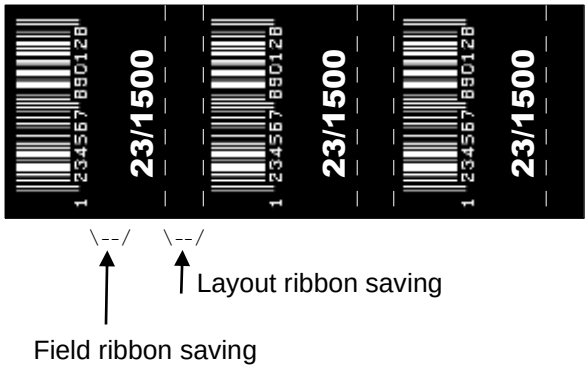

Transfer ribbon with ribbon saving

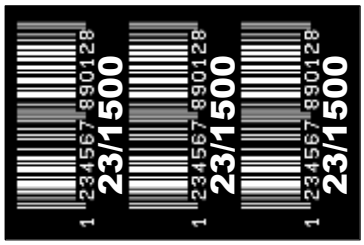

Procedure

In principle the ribbon saving is achieved by the way that the transfer ribbon in phases in those no printing is effected stopped or decelerated. If sufficient time is available, the transfer ribbon which was not used for printing can be retracted to print on it afterwards. The possibilities of ribbon saving and in this way of the print quality are to be connected with the available time which is needed for decelerating and accelerating of transfer ribbon.
There are two different types of ribbon saving:

Field ribbon saving

It is tried to save transfer ribbon with gaps within the layout. Because of the fact that the gaps are usually very small, only little time is available. Therefore a feedback is not reasonable (lack of time).

Layout ribbon saving

The gaps between the layouts are optimised. Usually more time is available here. The loss of transfer ribbon between the layouts which result from accelerating and decelerating of transfer ribbon can be corrected by means of the return.

9.10 Ribbon Saving STANDARD (Continuous Mode)

9.10.1 Required Parameters

Max. print speed

Determination of max. print speed.
On the base of this value all necessary calculations e.g. feedback distance and smallest possible print offset are being calculated.

Example

Speed = 400
Mode = Standard

Very good ribbon saving result between 50 mm/s and 400 mm/s.

However, if you print with a speed higher than 400 mm/s, then the ribbon saving result is decreased and/or the ribbon saving can no longer be executed, because the back-feed way was designed to 400 mm/s.

Please consider: if speed is set to 400 and only 300 mm/s are printed, then a smaller number of cycles is reached as if speed is set to 300, however a reserve of 100 mm/s is still available.

Therefore the speed value should be always set to the maximum print speed. If the number of cycles is not sufficient, the rewind correction should be applied.

Ribbon correction

0 mm = It is always so far retracted that an optimal ribbon saving is reached (no loss of transfer ribbon). This is rather rarely realised, as the ribbon position can deviate because of inaccuracies at speed measurement (encoder).
Default: -1 mm

−xx mm = The feedback can be made smaller. It causes loss of transfer ribbon but the number of cycles is increased. If the value is increased to the complete backfeed length then the direct print module sets automatically the max. value and no more backfeed is accomplished.

+xx mm = The feedback can be made larger. This causes that it is printed onto the transfer ribbon in the previous printout.

Example

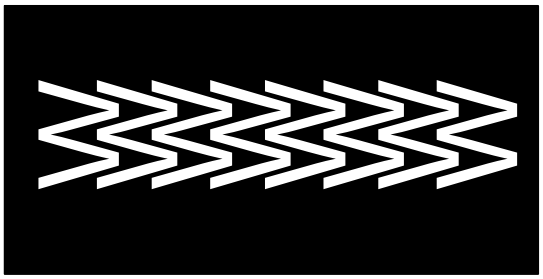

Transfer ribbon

Selection of transfer ribbon in meters that is used. Standard, Fast and Low indicate the tightening force with which the transfer ribbon is wound up.

Standard (Std) = used for normal transfer ribbon (for KCE printheads).

Low = is selected if the transfer ribbon was torn in Standard mode or the transfer ribbon can no longer be removed from the cassette. The transfer ribbon is not accelerated as much as with Standard and therefore it is also suitable when using thin transfer ribbon.

Fast = the transfer ribbon is accelerated faster and therefore a higher number of cycles can be achieved. It can occur that the transfer ribbon can no longer be removed from the cassette. To avoid this, an optional cassette is available on request.

Print offset

Indication of distance of the layout (res. the first layout in case more layouts per cycles are to be printed) to the zero point of machine.

Settings possible either in mm or ms.
Value range: 1 … 999 mm

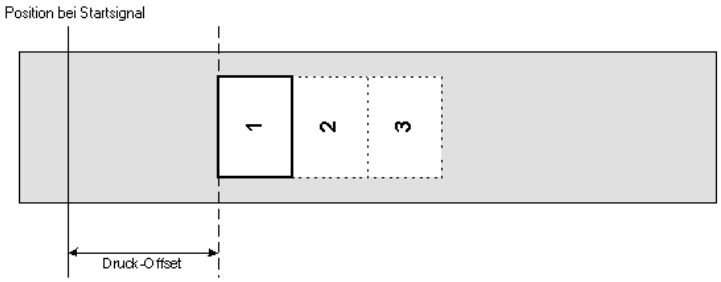

Min. distance between prints

The smallest possible distance between two prints with full ribbon saving (the print offset must be set to the minimum value). As basis for the calculation the set ribbon saving parameters are used, as well as mode and especially the indicated max. print speed.

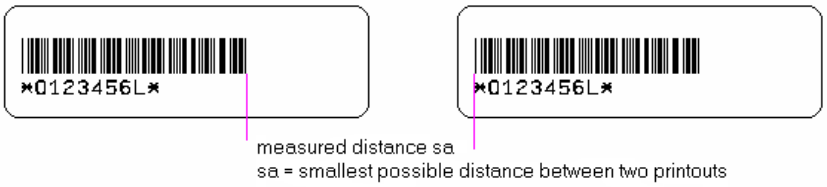

A detailed description can be found on page 153.

9.10.2 Print Performance Information

Min. distance between prints

The smallest possible distance between two prints with full ribbon saving (the print offset must be set to the minimum value). As basis for the calculation the set ribbon saving parameters are used, as well as mode and especially the indicated max. print speed.

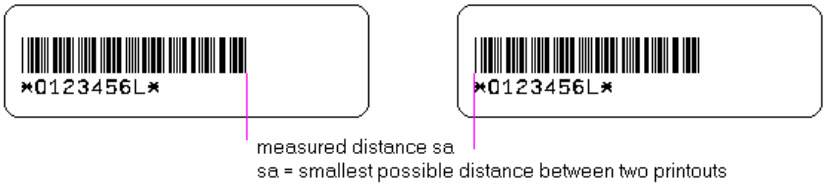

A detailed description can be found on page 153.

Max. number of cycles

Max. number of cycles per minute.

Ribbon utilization

Indicates the loss of ribbon saving, i.e. how many mm transfer ribbon is effectively lost.

9.10.3 Expert Parameters

Printhead down time

This is used from ribbon saving algorithm for the calculation of start time of printhead downwards movement.

Ribbon motor early start time

This value is added to the acceleration time of transfer ribbon movement. Time indication for the time between 'motor reached material speed' and 'printhead burns'.
If the same value is entered as for PhDownT, the printhead upwards movement is not started before the transfer ribbon motor reached the material speed.

Min. print speed

If the min. print speed is increased, the max. number of cycles is also increased.

Minimization print offset

The smallest possible print offset is automatically set in the menu *Machine parameters/Print offset*.

On: The print offset value range is set to the smallest possible value that can be achieved with the current settings (e.g. print speed).

Off: The print offset value range remains at the default setting.

Printhead valve react time	It is calculated when the printhead upwards movement is started.
Field ribbon saving mode	**Off:** Field ribbon saving mode Off. **PHOnly:** Only the printhead is moved. The transfer ribbon is not stopped. **Normal:** Field ribbon saving is executed only if the transfer ribbon motor is completely stopped. **Strong:** Field ribbon saving is executed, even if the transfer ribbon motor is not stopped.
Ribbon saving priority	If the measured speed fluctuation of the material exceeds the processing capability of the printing system, either the optimisation may be reduced, or the print position shifted.
Save start signal	The "SaveStrt" optimisation mode already exists. If a start signal is active during an active print, the transfer ribbon transport is controlled in such a way that the next layout is printed directly after completion of offset travel of the last start signal. To achieve this, however, an optimisation with transfer ribbon retraction is not possible. To enable a start signal during printing with retraction, this option can be enabled. In this case, however, sufficient print offset for transfer ribbon retraction must be ensured.
Ignore empty lines	In the default operation, the printing system stops for the entire layout length until a new layout can be printed, even if the layout is mainly empty. As some label programs do not provide any layout length, issues may occur in connection with the number of cycles, as the layout length remains constant despite varying lengths of the range to be printed. With this option, all empty lines can be ignored in the beginning, at the end or both.
Set print offset to minimum	Quick selection to set the print offset to the smallest possible value. **On:** The print offset value is reset to the smallest possible value. **Off:** The value remains at the preset print offset value.

9.10.4 General Parameters

Ribbon saving STANDARD

Maximum ribbon saving performance, i.e. with this setting there is no loss of transfer ribbon (apart from the safety distance of 1 mm, so the print fields are not printed one into the other).

No settings are allowed with which the ribbon saving no more cannot be achieved. This particularly applies for the print offset, which can only be adjusted now in the valid range.

Max. print speed

Determination of max. print speed.
On the base of this value all necessary calculations e.g. feedback distance and smallest possible print offset are being calculated.

9.11 Ribbon Saving SHIFT (Continuous Mode)

9.11.1 Required Parameters

Max. print speed

Determination of max. print speed.
On the base of this value all necessary calculations e.g. feedback distance and smallest possible print offset are being calculated.

Ribbon correction

0 mm = It is always so far retracted that an optimal ribbon saving is reached (no loss of transfer ribbon). This is rather rarely realised, as the ribbon position can deviate because of inaccuracies at speed measurement (encoder).
Default: -1 mm

−xx mm = The feedback can be made smaller. It causes loss of transfer ribbon but the number of cycles is increased. If the value is increased to the complete backfeed length then the direct print module sets automatically the max. value and no more backfeed is accomplished.

+xx mm = The feedback can be made larger. This causes that it is printed onto the transfer ribbon in the previous printout.

Example

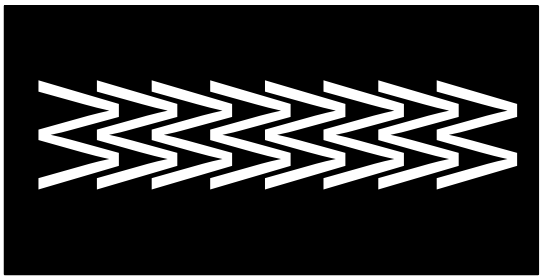

Transfer ribbon

Selection of transfer ribbon in meters that is used. Standard, Fast and Low indicate the tightening force with which the transfer ribbon is wound up.

Standard (Std) = used for normal transfer ribbon (for KCE printheads).

Low = is selected if the transfer ribbon was torn in Standard mode or the transfer ribbon can no longer be removed from the cassette. The transfer ribbon is not accelerated as much as with Standard and therefore it is also suitable when using thin transfer ribbon.

Fast = the transfer ribbon is accelerated faster and therefore a higher number of cycles can be achieved. It can occur that the transfer ribbon can no longer be removed from the cassette. To avoid this, an optional cassette is available on request.

Print offset

Indication of distance of the layout (res. the first layout in case more layouts per cycles are to be printed) to the zero point of machine.

Settings possible either in mm or ms.
Value range: 1 … 999 mm

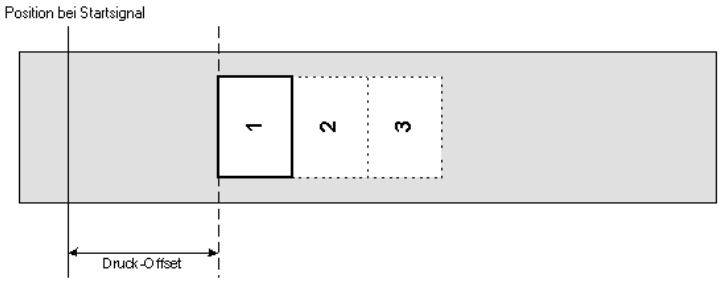

Min. distance between prints

The smallest possible distance between two prints with full ribbon saving (the print offset must be set to the minimum value). As basis for the calculation the set ribbon saving parameters are used, as well as mode and especially the indicated max. print speed.

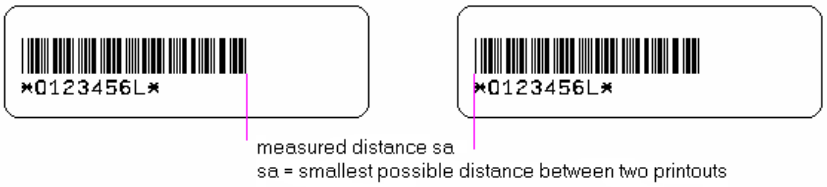

A detailed description can be found on page 153.

9.11.2 Ribbon Saving SHIFT Parameters

X-Shift

Indication of displacement of the printout in X direction. The printout can be displaced by the entry of a positive or negative value in both directions.

Y-Shift

Indication of displacement of the printout in printing direction. Enter value 0 in order to achieve a print result in which the columns are arranged side by side on the transfer ribbon.

Lane repeats

Indication of number of lanes printed side by side.

Lane Repeat Shift

Indication of distance when changing to a new lane.

Example

X-Shift: 2 mm; Y-Shift: −3 mm
Lanes: 2; R-Shift: −5

X-Shift: 2 mm; Y-Shift: −3 mm
Lanes: 2; R-Shift: +3 mm

Layout

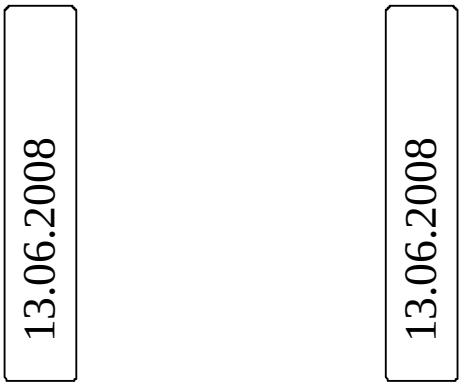

Transfer ribbon

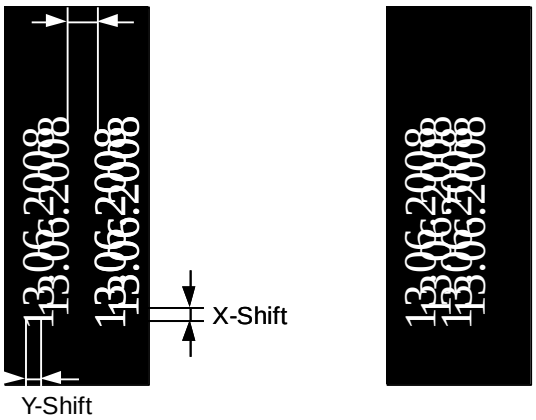

Print result

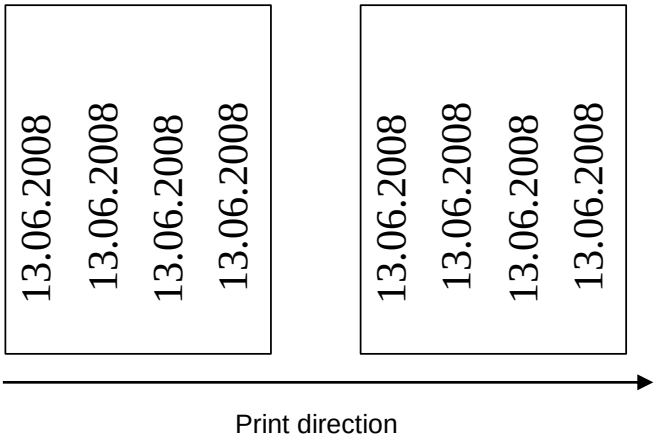

Example – Cycle printing

X-Shift: 0 mm; Y-Shift: −10 mm; Lanes: 2; R-Shift: 0 mm

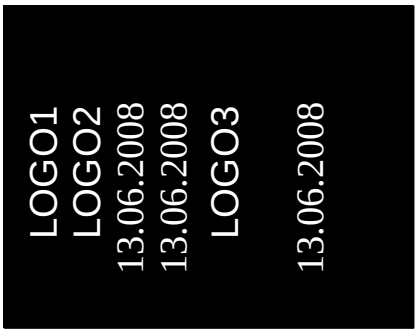

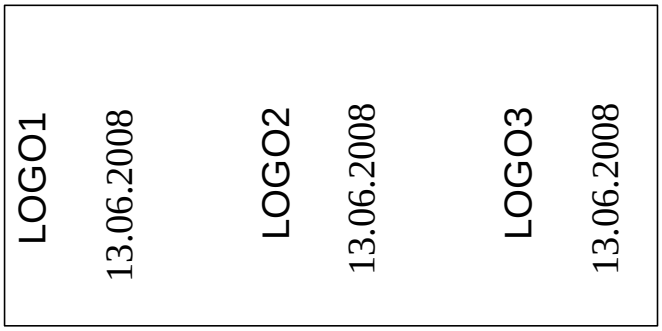

Supposed that the print speed is so high that no field ribbon saving is possible, but after a lane enough time is available then by means of the shift ribbon saving the gap of the fields can be filled with suitable layouts

9.11.3 Expert Parameters

Printhead down time

This is used from ribbon saving algorithm for the calculation of start time of printhead downwards movement.

Ribbon motor early start time

This value is added to the acceleration time of transfer ribbon movement. Time indication for the time between 'motor reached material speed' and 'printhead burns'.

If the same value is entered as for PhDownT, the printhead upwards movement is not started before the transfer ribbon motor reached the material speed.

Min. print speed

If the min. print speed is increased, the max. number of cycles is also increased.

Minimization print offset

The smallest possible print offset is automatically set in the menu *Machine parameters/Print offset*.

On: The print offset value range is set to the smallest possible value that can be achieved with the current settings (e.g. print speed).

Off: The print offset value range remains at the default setting.

Printhead valve react time

It is calculated when the printhead upwards movement is started.

Field ribbon saving mode

Off: Field ribbon saving mode Off.
PHOnly: Only the printhead is moved. The transfer ribbon is not stopped.
Normal: Field ribbon saving is executed only if the transfer ribbon motor is completely stopped.
Strong: Field ribbon saving is executed, even if the transfer ribbon motor is not stopped.

Ribbon saving priority

If the measured speed fluctuation of the material exceeds the processing capability of the printing system, either the optimisation may be reduced, or the print position shifted.

Save start signal

The "SaveStrt" optimisation mode already exists. If a start signal is active during an active print, the transfer ribbon transport is controlled in such a way that the next layout is printed directly after completion of offset travel of the last start signal. To achieve this, however, an optimisation with transfer ribbon retraction is not possible.

To enable a start signal during printing with retraction, this option can be enabled. In this case, however, sufficient print offset for transfer ribbon retraction must be ensured.

Ignore empty lines

In the default operation, the printing system stops for the entire layout length until a new layout can be printed, even if the layout is mainly empty. As some label programs do not provide any layout length, issues may occur in connection with the number of cycles, as the layout length remains constant despite varying lengths of the range to be printed. With this option, all empty lines can be ignored in the beginning, at the end or both.

Set print offset to minimum

Quick selection to set the print offset to the smallest possible value.

On: The print offset value is reset to the smallest possible value.

Off: The value remains at the preset print offset value.

9.11.4 General Parameters

Ribbon saving mode SHIFT

Layout data can be printed several times laterally displaced. A maximum utilization of transfer ribbon can be achieved.

Max. print speed

Determination of max. print speed.
On the base of this value all necessary calculations e.g. feedback distance and smallest possible print offset are being calculated.

9.12 Ribbon Saving SAVESTRT (Continuous Mode)

9.12.1 Required Parameters

Max. print speed

Determination of max. print speed.
On the base of this value all necessary calculations e.g. feedback distance and smallest possible print offset are being calculated.

Ribbon correction

0 mm = It is always so far retracted that an optimal ribbon saving is reached (no loss of transfer ribbon). This is rather rarely realised, as the ribbon position can deviate because of inaccuracies at speed measurement (encoder).
Default: -1 mm

−xx mm = The feedback can be made smaller. It causes loss of transfer ribbon but the number of cycles is increased. If the value is increased to the complete backfeed length then the direct print module sets automatically the max. value and no more backfeed is accomplished.

+xx mm = The feedback can be made larger. This causes that it is printed onto the transfer ribbon in the previous printout.

Example

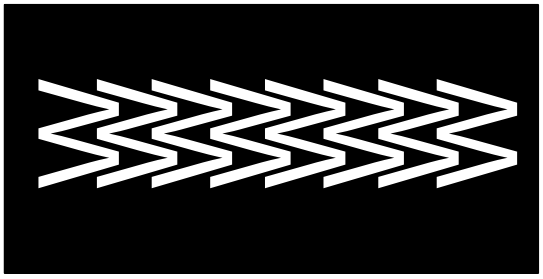

Transfer ribbon

Selection of transfer ribbon in meters that is used. Standard, Fast and Low indicate the tightening force with which the transfer ribbon is wound up.

Standard (Std) = used for normal transfer ribbon (for KCE printheads).

Low = is selected if the transfer ribbon was torn in Standard mode or the transfer ribbon can no longer be removed from the cassette. The transfer ribbon is not accelerated as much as with Standard and therefore it is also suitable when using thin transfer ribbon.

Fast = the transfer ribbon is accelerated faster and therefore a higher number of cycles can be achieved. It can occur that the transfer ribbon can no longer be removed from the cassette. To avoid this, an optional cassette is available on request.

Print offset

Indication of distance of the layout (res. the first layout in case more layouts per cycles are to be printed) to the zero point of machine.

Settings possible either in mm or ms.
Value range: 1 … 999 mm

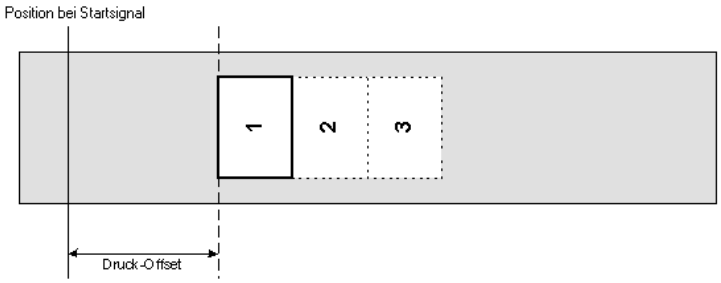

Min. distance between prints

The smallest possible distance between two prints with full ribbon saving (the print offset must be set to the minimum value). As basis for the calculation the set ribbon saving parameters are used, as well as mode and especially the indicated max. print speed.

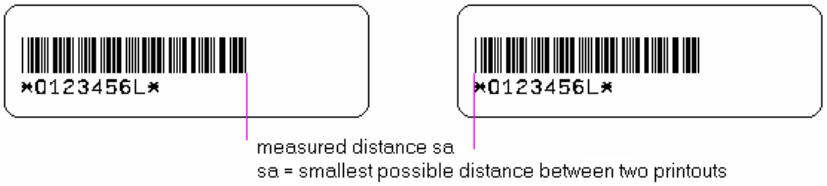

A detailed description can be found on page 153.

9.12.2 Expert Parameters

Printhead down time

This is used from ribbon saving algorithm for the calculation of start time of printhead downwards movement.

Ribbon motor early start time

This value is added to the acceleration time of transfer ribbon movement. Time indication for the time between 'motor reached material speed' and 'printhead burns'.
If the same value is entered as for PhDownT, the printhead upwards movement is not started before the transfer ribbon motor reached the material speed.

Min. print speed

If the min. print speed is increased, the max. number of cycles is also increased.

Minimization print offset

The smallest possible print offset is automatically set in the menu *Machine parameters/Print offset*.

On: The print offset value range is set to the smallest possible value that can be achieved with the current settings (e.g. print speed).

Off: The print offset value range remains at the default setting.

Printhead valve react time	It is calculated when the printhead upwards movement is started.
Field ribbon saving mode	**Off:** Field ribbon saving mode Off. **PHOnly:** Only the printhead is moved. The transfer ribbon is not stopped. **Normal:** Field ribbon saving is executed only if the transfer ribbon motor is completely stopped. **Strong:** Field ribbon saving is executed, even if the transfer ribbon motor is not stopped.
Ribbon saving priority	If the measured speed fluctuation of the material exceeds the processing capability of the printing system, either the optimisation may be reduced, or the print position shifted.
Save start signal	The "SaveStrt" optimisation mode already exists. If a start signal is active during an active print, the transfer ribbon transport is controlled in such a way that the next layout is printed directly after completion of offset travel of the last start signal. To achieve this, however, an optimisation with transfer ribbon retraction is not possible. To enable a start signal during printing with retraction, this option can be enabled. In this case, however, sufficient print offset for transfer ribbon retraction must be ensured.
Ignore empty lines	In the default operation, the printing system stops for the entire layout length until a new layout can be printed, even if the layout is mainly empty. As some label programs do not provide any layout length, issues may occur in connection with the number of cycles, as the layout length remains constant despite varying lengths of the range to be printed. With this option, all empty lines can be ignored in the beginning, at the end or both.
Set print offset to minimum	Quick selection to set the print offset to the smallest possible value. **On:** The print offset value is reset to the smallest possible value. **Off:** The value remains at the preset print offset value.

9.12.3 General Parameters

Ribbon saving mode SAVESTRT	No start signal loss, direct print module regulates the ribbon saving quality automatically according to requirement. Automatic layout ribbon saving and field ribbon saving, each without feedback.
Max. print speed	Determination of max. print speed. On the base of this value all necessary calculations e.g. feedback distance and smallest possible print offset are being calculated.

9.13 Ribbon Saving STANDARD (Intermittent Mode

9.13.1 Required Parameters

Ribbon correction

0 mm = It is always so far retracted that an optimal ribbon saving is reached (no loss of transfer ribbon). This is rather rarely realised, as the ribbon position can deviate because of inaccuracies at speed measurement (encoder).
Default: -1 mm

−xx mm = The feedback can be made smaller. It causes loss of transfer ribbon but the number of cycles is increased. If the value is increased to the complete backfeed length then the direct print module sets automatically the max. value and no more backfeed is accomplished.

+xx mm = The feedback can be made larger. This causes that it is printed onto the transfer ribbon in the previous printout.

Example

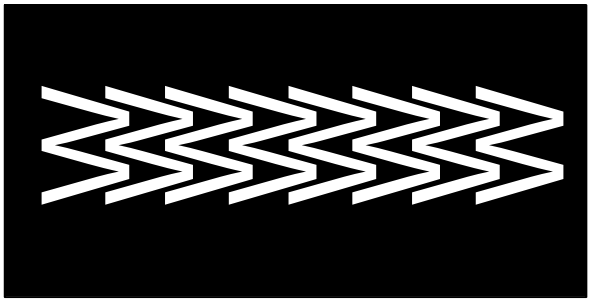

Transfer ribbon

Selection of transfer ribbon in meters that is used. Standard, Fast and Low indicate the tightening force with which the transfer ribbon is wound up.

Standard (Std) = used for normal transfer ribbon (for KCE printheads).

Low = is selected if the transfer ribbon was torn in Standard mode or the transfer ribbon can no longer be removed from the cassette. The transfer ribbon is not accelerated as much as with Standard and therefore it is also suitable when using thin transfer ribbon.

Fast = the transfer ribbon is accelerated faster and therefore a higher number of cycles can be achieved. It can occur that the transfer ribbon can no longer be removed from the cassette. To avoid this, an optional cassette is available on request.

Print offset

Indication of distance of the layout (res. the first layout in case more layouts per cycles are to be printed) to the zero point of machine.

Settings possible either in mm or ms.
Value range: 1 … 999 mm

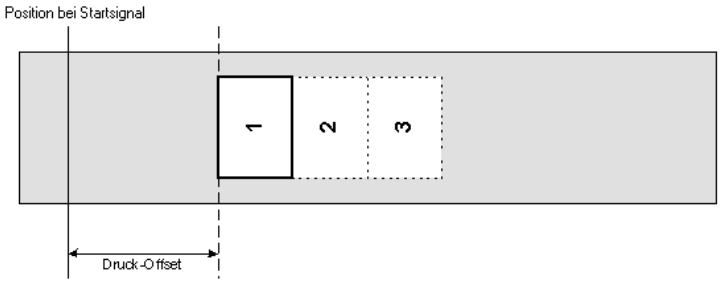

9.13.2 Expert Parameters

Printhead down time

Is used from the ribbon saving algorithm to calculate the start of the printhead downwards movement.

Printhead valve react time

The time is calculated when the printhead upwards movement is started.

Ignore empty lines

In the default operation, the printing system stops for the entire layout length until a new layout can be printed, even if the layout is mainly empty. As some label programs do not provide any layout length, issues may occur in connection with the number of cycles, as the layout length remains constant despite varying lengths of the range to be printed. With this option, all empty lines can be ignored in the beginning, at the end or both.

Set print offset to minimum

Quick selection to set the print offset to the smallest possible value.

On: The print offset value is reset to the smallest possible value.

Off: The value remains at the preset print offset value.

9.13.3 General Parameters

Ribbon saving mode STANDARD

Maximum ribbon saving performance, i.e. with this setting there is no loss of transfer ribbon (apart from the safety distance of 1 mm, so the print fields are not printed one into the other).
No settings are allowed with which the ribbon saving no more cannot be achieved. This particularly applies for the print offset, which can only be adjusted now in the valid range.

9.14 Ribbon Saving SHIFT (Intermittent Mode)

9.14.1 Required Parameters

Ribbon correction

0 mm = It is always so far retracted that an optimal ribbon saving is reached (no loss of transfer ribbon). This is rather rarely realised, as the ribbon position can deviate because of inaccuracies at speed measurement (encoder).
Default: -1 mm

−xx mm = The feedback can be made smaller. It causes loss of transfer ribbon but the number of cycles is increased. If the value is increased to the complete backfeed length then the direct print module sets automatically the max. value and no more backfeed is accomplished.

+xx mm = The feedback can be made larger. This causes that it is printed onto the transfer ribbon in the previous printout.

Example

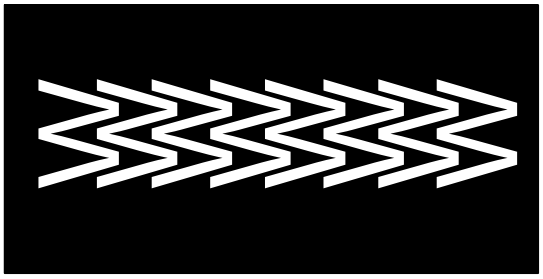

Transfer ribbon

Selection of transfer ribbon in meters that is used. Standard, Fast and Low indicate the tightening force with which the transfer ribbon is wound up.

Standard (Std) = used for normal transfer ribbon (for KCE printheads).

Low = is selected if the transfer ribbon was torn in Standard mode or the transfer ribbon can no longer be removed from the cassette. The transfer ribbon is not accelerated as much as with Standard and therefore it is also suitable when using thin transfer ribbon.

Fast = the transfer ribbon is accelerated faster and therefore a higher number of cycles can be achieved. It can occur that the transfer ribbon can no longer be removed from the cassette. To avoid this, an optional cassette is available on request.

Print offset

Indication of distance of the layout (res. the first layout in case more layouts per cycles are to be printed) to the zero point of machine.

Settings possible either in mm or ms.
Value range: 1 … 999 mm

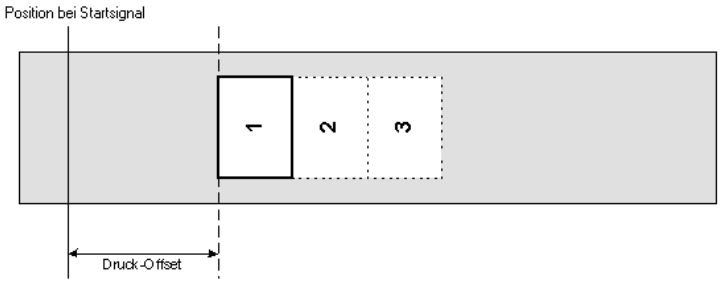

9.14.2 Ribbon Saving SHIFT Parameters

X-Shift

Indication of displacement of the printout in X direction. The printout can be displaced by the entry of a positive or negative value in both directions.

Y-Shift

Indication of displacement of the printout in printing direction. Enter value 0 in order to achieve a print result in which the columns are arranged side by side on the transfer ribbon.

Lane repeats

Indication of number of lanes printed side by side.

Lane repeat shift

Indication of distance when changing to a new lane.

Example

X-Shift: 2 mm; Y-Shift: −3 mm
Lanes: 2; R-Shift: −5

X-Shift: 2 mm; Y-Shift: −3 mm
Lanes: 2; R-Shift: +3 mm

Layout

Transfer ribbon

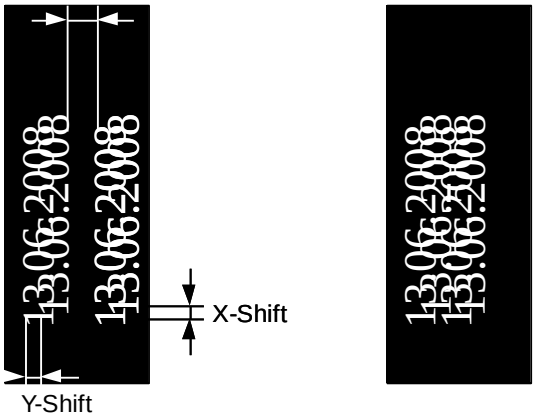

Print result

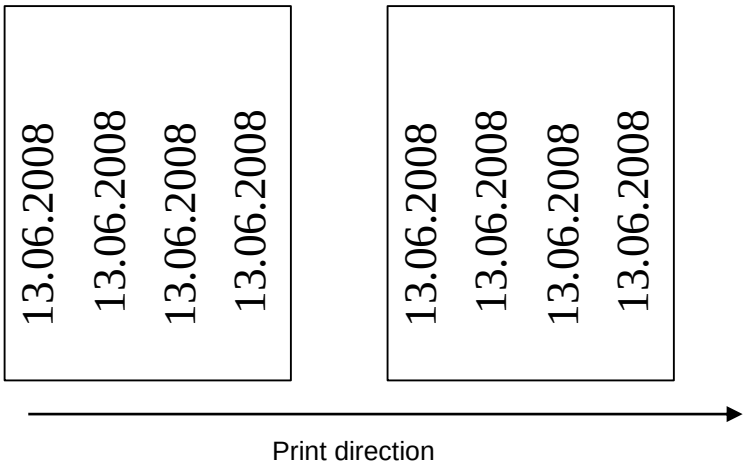

Example – Cycle printing

X-Shift: 0 mm; Y-Shift: −10 mm; Lanes: 2; R-Shift: 0 mm

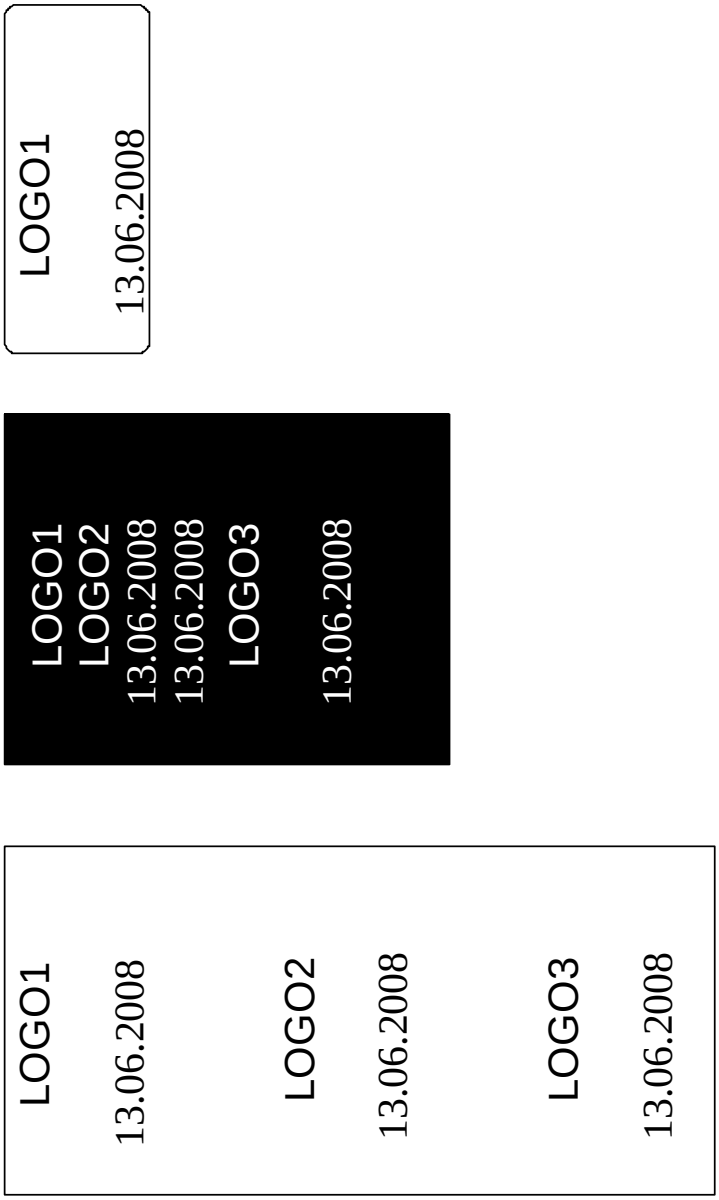

Supposed that the print speed is so high that no field ribbon saving is possible, but after a lane enough time is available then by means of the shift ribbon saving the gap of the fields can be filled with suitable layouts.

A detailed description can be found on page 159.

9.14.3 Expert Parameters

Printhead down time

This is used from ribbon saving algorithm for the calculation of start time of printhead downwards movement.

Ribbon motor early start time

This value is added to the acceleration time of transfer ribbon movement. Time indication for the time between 'motor reached material speed' and 'printhead burns'.

If the same value is entered as for PhDownT, the printhead upwards movement is not started before the transfer ribbon motor reached the material speed.

Ignore empty lines

In the default operation, the printing system stops for the entire layout length until a new layout can be printed, even if the layout is mainly empty. As some label programs do not provide any layout length, issues may occur in connection with the number of cycles, as the layout length remains constant despite varying lengths of the range to be printed. With this option, all empty lines can be ignored in the beginning, at the end or both.

Set print offset to minimum

Quick selection to set the print offset to the smallest possible value.

On: The print offset value is reset to the smallest possible value.

Off: The value remains at the preset print offset value.

9.14.4 General Parameters

Ribbon saving mode SHIFT

Layout data can be printed several times laterally displaced. A maximum utilisation of transfer ribbon can be achieved.

9.15 Network

IP address (DHCP)

Each participant must have a 32-bit address. The IP address is separated by full stops and arranged into four parts. Each part has a number range of 0 … 255.

Network mask (DHCP)

In connection with the IP address of the printer, the netmask determines which IP addresses this device searches in the own network.

Standard gateway (DHCP)

The IP address of the network gateway. If the IP address was referred by DHCP then DHCP is indicated in brackets.

Speed and duplex

Automatic:	Default setting. The speed is recognized automatically. Normally this procedure is reliable. In most cases it is not necessary to change the settings.
10 Mbit half:	Speed 10 Mbit/s in the half-duplex transmission method.
10 Mbit full:	Speed 10 MBit/s in the full-duplex transmission method.
100 Mbit half:	Speed 100 MBit/s in the half-duplex transmission method.
100 Mbit full:	Speed 100 MBit/s in the full-duplex transmission method.

DHCP

DHCP permits the automatic referring of the network parameters IP address, network mask and standard gateway of a DHCP server which must be installed in the network.

Printer name

The name of the installed printer in the network. The printer name in connection with DHCP can be used to respond the printer. If DHCP is active and the name of the printer is changed, the printer logs out itself at the DHCP server and afterwards the printer logs in again. After changing the printer name, the printer can have a new IP address.

MAC address

The MAC address (Media Access Control) is the hardware address of each individual network adapter and serves for the clear identification of the printer in network.

9.16 Interface

9.16.1 COM1

COM1 mode

Off: serial interface Off
On (mode 1): serial interface On
On (mode 2): serial interface On; no error message appears in case of a transmission error

Baud rate

Indication of bits which are transferred per second (speed of data transfer).
Value range: 1200, 2400, 4800, 9600, 19200, 38400, 57600 and 115200.

Parity

None: No parity
Even: Even parity
Odd: Odd parity

Data bits

Setting of data bits.
Value range: 7 or 8 Bits.

Stop bits

Indication of stop bits between bytes.
Value range: 1 or 2 stop bits.

9.16.2 General Parameters

SOH/ETB

SOH: Start of data transfer block → Hex format 01
ETB: End of data transfer block → Hex formal 17

Two different start / en signs can be set. The settings are normally SOH = 01 HEX and ETB = 17 HEX. Several host computers cannot process these signs and therefore SOH = 5E HEX and ETB = 5F cannot be set.

Data memory

Off: After starting a print order no more data is received.
Standard: After starting a print order the printer buffer receives data as long as it is filled.
Advanced: During a current print order data is received and processed.

Port test

Check whether the data are transferred via the interface.

9.17 Emulation

Protocol

CVPL: Carl Valentin Programming Language
ZPL: Zebra® Programming Language
Change between CVPL protocol and ZPL II® protocol.

The printer performs a restart and ZPL II® commands are transformed into CVPL commands internally by the printer and then executed by the printer.

Printhead resolution

At activated ZPL II® emulation the printhead resolution of the emulated printer must be set, e.g. 11.8 Dot/mm (= 300 dpi).

NOTICE!

If the printhead resolution of the Zebra® printer differs from that of the Valentin printer, then the size of objects (e.g. texts, graphics) complies not exactly.

Drive mapping

The access to ® drives
B: CF cart
E: Flash drive
R: RAM disk (standard drive, if not indicated)

is rerouted to the corresponding Valentin drives
A: CF
R: RAM disk
U: USB stick

This can be necessary if the available space on the RAM disk (at present. 512 KByte) is not sufficient or if bitmap fonts are downloaded to the printer and be stored permanently.

NOTICE!

As the printer build-in fonts in Zebra® printers are not available in Valentin printers, this can cause small differences in the text image.

PJL (Printer Job Language)

Status information regarding the print order can be indicated.

9.18 Date/Time

9.18.1 Daylight Saving Time (DST)

Daylight saving time

On: Printer automatically adjust clock for daylight saving changes.
Off: Summertime is not automatically recognized and adjusted.

DST difference (HH:MM

Indication of time difference in hours and minutes for summer/winter time changeover.

9.18.2 Start Daylight Saving Time

DST start (format)

Selection of format to enter the start of the daylight saving time (European format).

DD = day	WW = week	WD = weekday
MM = month	YY = year	NWD = only next day is taken into consideration

DST start date (week)

Selection of the week when the daylight saving time should begin.

DST start date (weekday)

Selection of weekday when the daylight saving time should begin.

DST start date (month)

Selection of month when the daylight saving time should begin.

DST start time (HH:MM)

Selection of time when the daylight saving time should begin.

9.18.3 End Daylight Saving Time

DST end (format)

Selection of format to enter the end of the daylight saving time.
The example shows the standard settings (European format).

DST end date (week)

Selection of the week when the daylight saving time should end.

DST end date (weekday)

Selection of the weekday when the daylight saving time should end.

DST end date (month)

Selection of the month when the daylight saving time should end.

DST end time (HH:MM)

Selection of time when the daylight saving time should end.

9.18.4 General Parameters

Date (DD.MM.YY)

Indication of current date.

Time (HH:MM:SS)

Indication of current time.

9.19 Service Functions

9.19.1 Sensor Status

Cover / Pressure	Cover: Only available at devices with cover switch. Indication of value 0 or 1 for cover open and/or cover closed Pressure: Indication of value 0 or 1 or compressed air control.
Ribbon encoder winder	Indication of value 0 to 3 for the status of transfer ribbon rewinding roll. Indication of transfer ribbon rewinding roll status. 4 states are indicated (no marking in photocell, marking from right, marking from left, marking completely in photocell).
Ribbbon encoder unwinder	Indication of value 0 to 3 for the status of transfer ribbon unwinding roll. Indication of transfer ribbon unwinding roll status. 4 states are indicated (no marking in photocell, marking from right, marking from left, marking completely in photocell).
Carriage sensors	Indication of print carriage position.
Material encoder	Indication of current state of encoder
Carriage sensor left	Verifies the left stop of printing carriage.
Carriage sensor right	Verifies the right stop of printing carriage.
Counter ribbon encoder rewinder	In the case of a full rotation of the transfer ribbon encoder rewinder, the counter should be increased/decreased by the second value (depending on the direction of rotation). If this is not the case, there may be a problem with the sensor.
Counter ribbon encoder unwinder	In the case of a full rotation of the transfer ribbon encoder unwinder, the counter should be increased/decreased by the second value (depending on the direction of rotation). If this is not the case, there may be a problem with the sensor.
Material encoder counter	Indication of counter status of encoder.

9.19.2 Device Status

Paper counter printhead	Indication of printhead attainment in meters.
Paper counter machine	Indication of direct print module attainment in meters.
Heater resistance	To achieve a high print quality, the indicated Ohm value must be set after replacing the printhead.
Printhead temperature	Indication of printhead temperature. The printhead temperature corresponds normally to the room temperature. In case the maximum printhead temperature is exceeded, the current print order is interrupted and an error message appears at the direct print module display.
Mechanics temperature	Indication of print mechanics temperature.
Online / Offline	This function is activated e.g. if the transfer ribbon is to be changed. It is avoided that a print order is processed although the module is not ready. The respective state is indicated in the display. Standard: Off **Online:** Data can be received by interface. **Offline:** The keys of the foil keyboard are still active but received data are not processed. If the module is again in Online mode then new print orders can be again received.

9.19.3 Ribbon Service

Length and ink side

Transfer ribbon width:
Selection of the used transfer ribbon width (depending on printhead either 53 mm, 107 mm or 128 mm).

Transfer ribbon:
Selection of the used transfer ribbon length (300 m, 450 m, 600 m, 900 m or 1000 m). With smaller ribbons, a higher number of cycles can be reached. Standard, Fast and Low indicate the tightening force with which the transfer ribbon is wound up.

Standard (Std) = used for normal transfer ribbon (for KCE printheads).

Low = is selected if the transfer ribbon was torn in Standard mode or the transfer ribbon can no longer be removed from the cassette. The transfer ribbon is not accelerated as much as with Standard and therefore it is also suitable when using thin transfer ribbon.

Fast = the transfer ribbon is accelerated faster and therefore a higher number of cycles can be achieved. It can occur that the transfer ribbon can no longer be removed from the cassette. To avoid this, an optional cassette is available on request.

Maximum diameter for consumption display:
The maximum diameter of the consumption display is automatically generated and set by selecting the transfer ribbon length. The transfer ribbon diameter can also be measured and entered manually. The consumption display is shown on the left side of the Home screen from 0 … 100 %.

NOTICE!

Depending on the transfer ribbon used, deviations may occur in the determination. Depending on the thickness of the transfer ribbon, the value must be increased or decreased.

Winding:
Selection of the coating side of transfer ribbon, either outside or inside.

Prewarning

Ribbon prior warning: Before the end of transfer ribbon, a signal is sent by the control output.

Ribbon prior warning diameter: Setting of transfer ribbon advance warning diameter.
In case you enter a value in mm then a signal appears via control output when reaching this diameter (measured at transfer ribbon roll).
Value range: 0 … 255 mm

Ribbon prior warning mode:
Warning: When reaching the transfer ribbon advance warning diamter, the corresponding I/O output is set.
Error: The printing system stops when reaching the transfer ribbon advance warning diameter with the message 'too less ribbon'.

Current diameters

Diameter ribbon rewinder: Indication how much transfer ribbon is already on the rewinding roll, i.e. how much transfer ribbon was already used.

Diameter ribbon unwinder: Indication how much transfer ribbon is still on the unwinding roll.

Remaining roll length: Indication how much transfer ribbon in meters is still on the ribbon roll available.

Roll diameter: Indication how much transfer ribbon is still on the transfer ribbon roll. For a correct display some layouts must be reprinted.

Time left: Indication during a current print order, how long it can be printed with the existing transfer ribbon.

9.19.4 Brake Service

Brake power

Adjustment of brake power for acceleration and braking in %.

Brake power print

Adjustment of brake power during printing.

9.19.5 I/O Status

PrtStrtIntsReal

The start input impulses are counted directly at the Interrupt.

PrtStrtIntsDebounced

The start input impulses that are longer than the set debounce time are counted. Only these start impulses can lead to a print. If a start impulse is too short, no print is released. This is recognized by the fact that RInt is counted, Dbnc not.

PrtStrtIntsNoPrint

The debounced start input impulses that have not lead to a print are counted. Causes: no active print order, print order stopped (manually or because of an error) or the printing system is still active with the processing of a print order.

PrtStrtReset

The counters are reset.

PrtStrtTime

Measured length of the last start impulse in ms.

I/O status input

Indication of input signal level
0 = Low
1 = High

I/O status output

Indication of output signal level
0 = Low
1 = High

I/O test output

Quick selection of the required output. Then the signal level must be selected with *I/O status test output*.

I/O status test output

Selection of the output signal level previously selected under I/O test output.
0 = Low
1 = High

9.19.6 Encoder Service

Encoder profile

The encoder values with print start in logging files are registered on CF card. By means of this data, a graphic chart of the encoder curve can be created.
For further information please contact our support department.

Last print min. speed*

Indicates the speed fluctuation within one layout measured by the rotary encoder.

Measured minimum speed of the last layout.

Last print max. speed*

Indicates the speed fluctuation within one layout measured by the rotary encoder.

Measured maximum speed of the last layout.

* continuous mode only

9.19.7 General Parameters

Print examples

Settings: Printout of all device settings such as speed and transfer ribbon material.
Bar codes: Printout of all available bar code types.
Fonts: Printout of all available font types.

Device operating mode

Define whether the printing system is used in continuous mode (see page 13) or in intermittent mode (see page 15).

Write log files to memory card

Starting with firmware version 1.70, the printer logs different events internally. In case of service, the error cause can be located faster.

With this command, different log files are saved on an existing storage medium (memory card or USB stick). After the 'Finish' message the storage medium can be removed.

The files are in directory 'log':

LogMemErr.txt: Logged errors with additional information such as date/time and file name/line number (for developers).

LogMemStd.txt: Logging of selected events.

LogMemNet.txt: Data latest send via port 9100.

Parameters.log: All printer parameters in human readable form.

TaskStatus.txt: Status of all printer tasks.

The files *LogMemErr.txt* and *LogMemStd.txt* are written in circle, i.e. old contents are overwritten. The entry logged last is marked with „---„

Delete print job and spool file

The current print order and all pending print orders are deleted.

9.20 Password

With a password different functions can be blocked for the operator. There are different applications with which such a password protection can be used reasonably. To receive a most flexible password protection, the printing system functions will be divided into several function groups.

Because of these different function groups the password protection is very flexible. The printing system can be adjusted best to its actual order, as only certain functions are blocked.

9.20.1 Operation

Password

Entering a 4-digit numeric password.

Protection configuration

Device settings can be changed (contrast, speed, operating mode, ...). The password protection prevents modifications at the device settings.

Protection favorites

The password protection prevents the access to the favorites.

Protection memory card

With the functions of the memory card, labels can be stored, loaded, etc. The password protection has to decide if no access or only readable access on CF card is allowed.

No protection: No password protection
Userview only: Only reading access
Protected: Access blocked

Protection Printing

In case the printing system is connected to a PC, it can be useful, that the user is not able to produce a print manually. So the password protection prevents that prints can be produced manually.

In order to execute a blocked function, first of all the valid password has to be entered. If the correct password is entered then the desired function can be executed.

9.20.2 Network

Password	Entering a 15-digit password. The password can consist of alphanumeric and special characters.
Protection HTTP	The communication by HTTP can be avoided.
Protection Telnet	The settings of the Telnet service cannot be changed.
Protection remote access	The password protection prevents the remote control of the printer. In order to execute a blocked function, first of all the valid password has to be entered. If the correct password is entered then the desired function can be executed.

9.21 Maintenance

9.21.1 Test Function

Printhead up/down

The printhead can be moved manually downward and upwards.

Carriage position print/park

The printing carriage can be moved manually into the print and park position.

9.21.2 Print Preview

Preview available

With activated print preview a picture of the currently printed layout is shown on the display. If the function is not activated, the field remains empty.

Zoom

Selection of a certain zoom value for the representation of print preview.

Label: The complete layout is fit to the indication zone.

Fields: Only the print range is fit to the indication zone.

1 .. 8: Manual zoom factor to scale the complete layout down.

Preview rotated

The display of label preview can be rotated on the touch-screen display.
On: The label preview is shown rotated by 180° on the display.
Off: The label preview is represented in read direction.

Preview interval

During a running print order the preview is refreshed in the set interval.

Show process data

In order to show the process data, the parameter must be activated before in the menu *Maintenance/Print preview*.

Add parameters to process data:
The associated selection is displayed by pressing and holding (2 s) on a parameter. With *Add to process data* the selected parameter is added to the list of process data.

Remove parameters from process data:
The associated selection is displayed by pressing and holding (2 s) on a parameter. With Remove from process data the selected parameter is deleted from the list.

Changing the display process data – print preview:
When the print preview is activated, an image of the currently printed layout is shown on the display. The change to process data view can be done by swiping to the right.

9.21.3 LCD

Backlight

Setting of contrast of background lighting.
Value range: 0 … 100 %.

LCD orientation

Landscape 180°: The display is represented turned by 180 degres to the function 'Landscape'.

Landscape: The display is represented turned by 90 degres to the reading direction.

Portrait: The display is represented in reading direction.

Portrait 180°: The display is represented turned by 180 degres.

9.21.4 System Settings

NOTICE!

All settings and modifications in system settings require the respective password.

The following system settings can be made:

- Device type
- Reset paper counter printhead
- Reset paper counter device
- Set default settings
- OEM client ID
- Customized info field

9.22 Main Menu

Switch on the direct print module and the display shows the Home screen

Press button to display information such as module type, current date and time, version number of firmware and used FPGA.

10 Touch-Screen Display

10.1 Touch-Sscreen Display Structure

The touch-screen display shows an intuitive graphic user interface with well-defined symbols and buttons.

The touch-screen display informs about the current device status and status of the print order, alerts in case of an error and indicates the device settings in the menu.

The desired settings are made by selecting the buttons on the touch-screen display.

Current date & time

Printer name (in the network parameters)

Transfer ribbon status

Customized info field

Favorites	Display favorites list
Configuration	Select parameter settings
Memory Card	Access to memory card menu
Print	Start print job
Test print	Start test print
Formfeed	Start layout feed
Info	List of the installed components

10.2 Different Menus

Indication of main menus

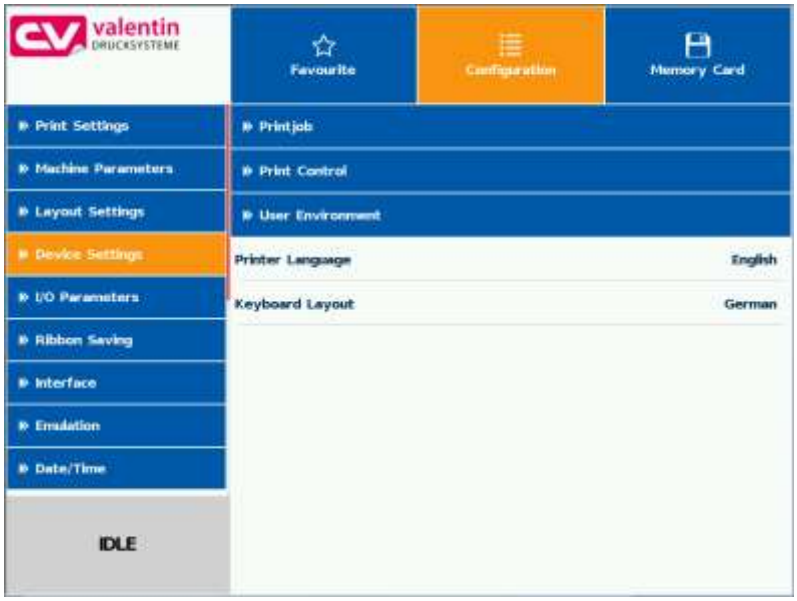

The selected (active) menu is highlighted on orange background.

If a selected menu contains so-called submenus, these are blue highlighted.

Indication of submenus

Different parameters are combined in a submenu.

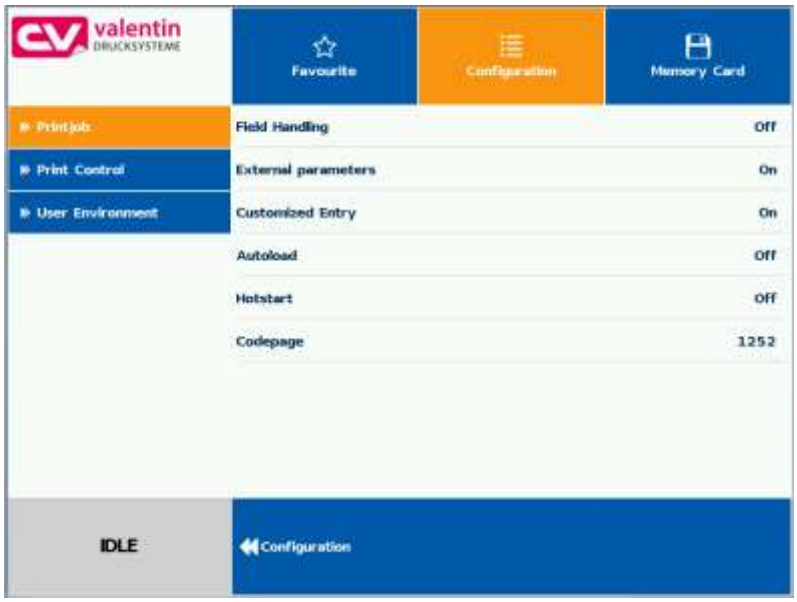

The left display side shows the available submenus. The currently selected (active) submenu is highlighted on orange background.

Press to return one level.

10.3 User-Defined Info Field

From the predefined contents, the user can define the display of the user-defined info field (green).

Select the menu *Maintenance/System settings/User-defined info field* to specify what is to be displayed in the user-defined info field.

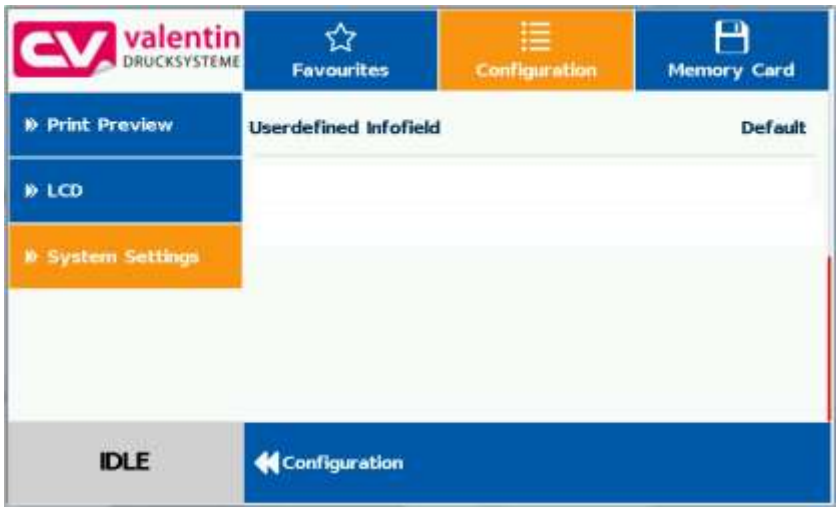

Selection of parameters

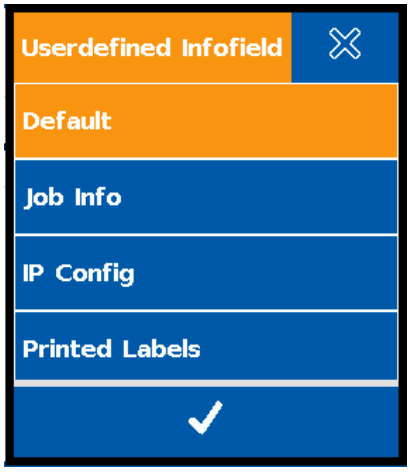

Standard:	**Horizontal display orientation:** Empty info field **Vertical display orientation:** Indication of job info (label name and number of printed labels)
Job info:	Indication of label names and the number of already printed
IP configuration:	Indication of IP address and MAC address of printing system
Printed labels:	Indication of printed labels as enlarged text output

Display of predefined configuration

10.4 Favorites List

Add parameters to favorites

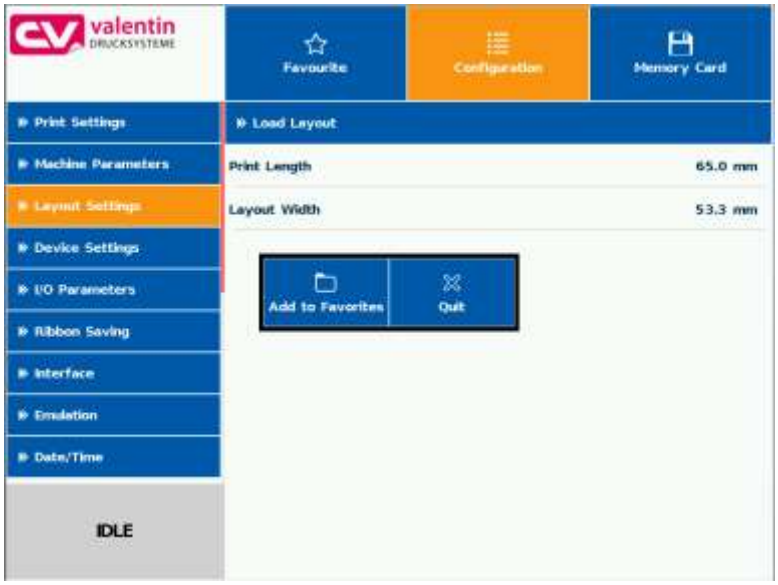

Press long (2 s) on a parameter (e.g. print speed) to display the appropriate selection.

Press *Add to favorites* to add the selected parameter to the favorites list.

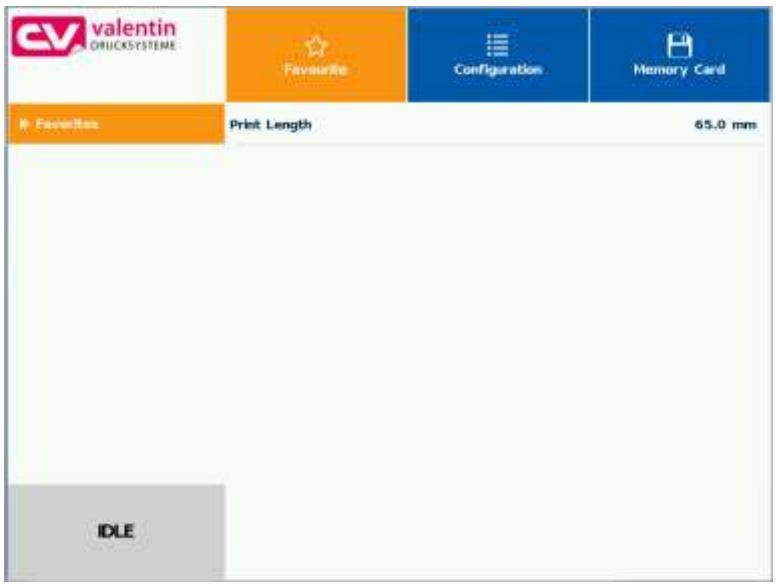

Remove parameters from favorites

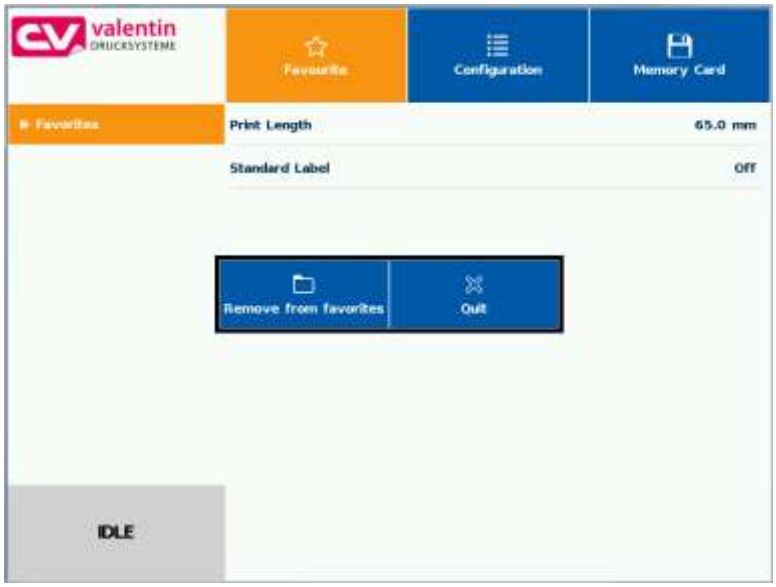

Press long (2 s) on a parameter (e.g. print speed) to display the appropriate selection. Press *Remove from favorites* to remove the selected parameter from the favorites list.

10.5 Parameter Input

Parameter input

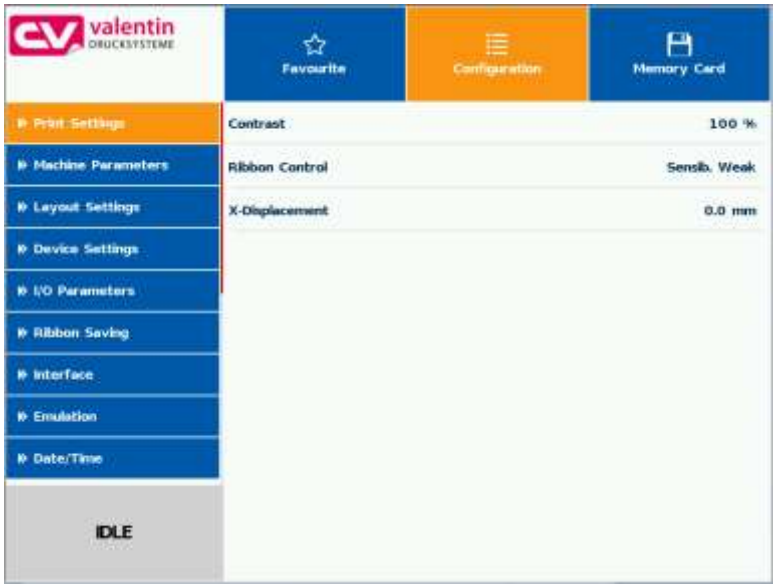

Numeric input

In the header of input dialog the name of the parameter and the permissible value range are shown. The input is checked for validity. If the entered value not permissible, the button is blocked.

Selection from list

Select the parameter for which you want to change the selection.

The currently selected value is highlighted on orange background.

Press ☑ to confirm the selection.

Alphanumeric input

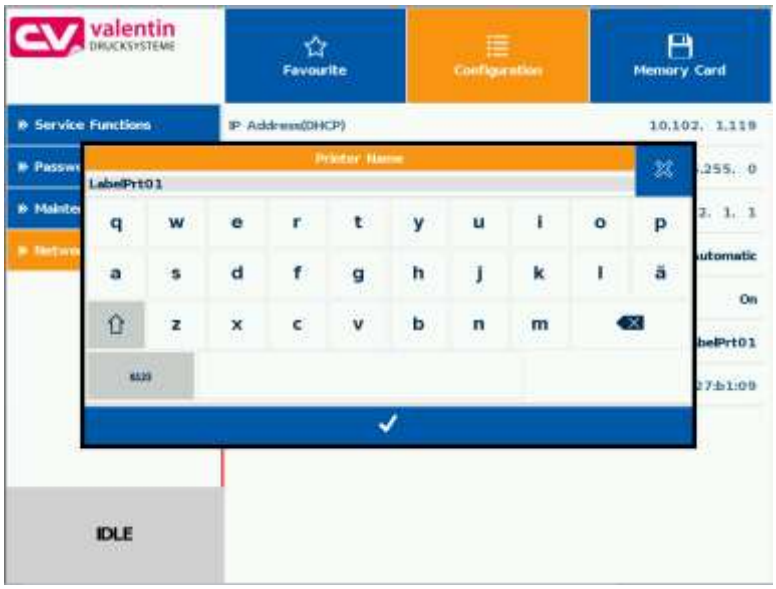

The alphanumeric input is shown in the header of input dialog.

Press ☑ to confirm the selection.

10.6 Navigation Zones

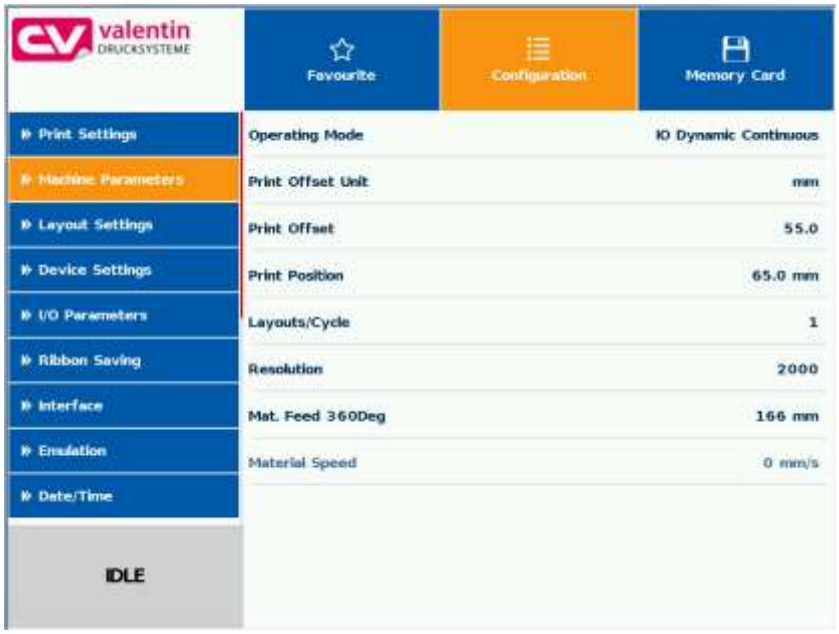

The respective navigation zone can be moved with an appropriate swipe movement from top to bottom or from the bottom up.

NOTE!

With the used resistive touch screen variant a certain pressure on the display is needed.
With the swipe movement to the left and right (well-known from smartphones) with the finger, cannot be navigated on the display.

The position indications signalise the detail of the total list currently visible. If no position indication is visible then the total list can be displayed on the display. A swipe movement from top to bottom and/or from the bottom up is not possible.

10.7 Maintenance Zone

Different settings for the display indication can be done.

Maintenance – Test function

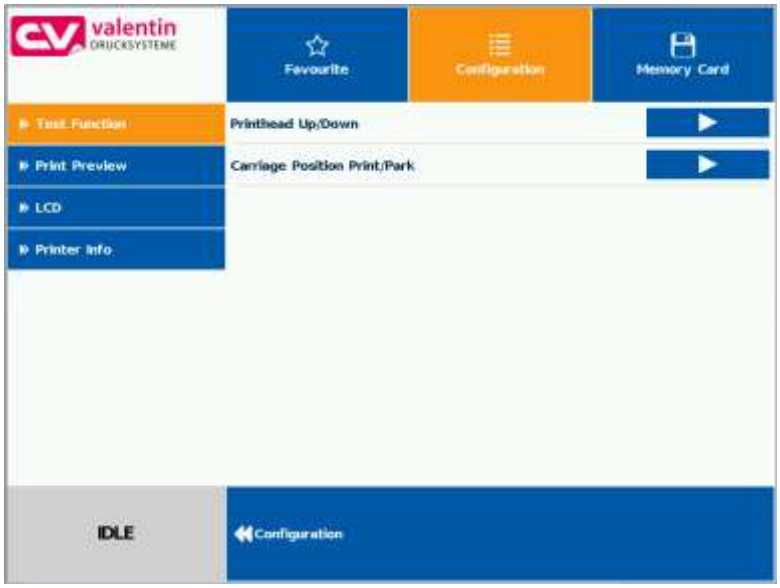

Printhead up/down

The printhead can be moved manually downwards and upwards.

Carriage position print/park

The printing carriage can be moved manually into the print and park position.

Maintenance - Print preview

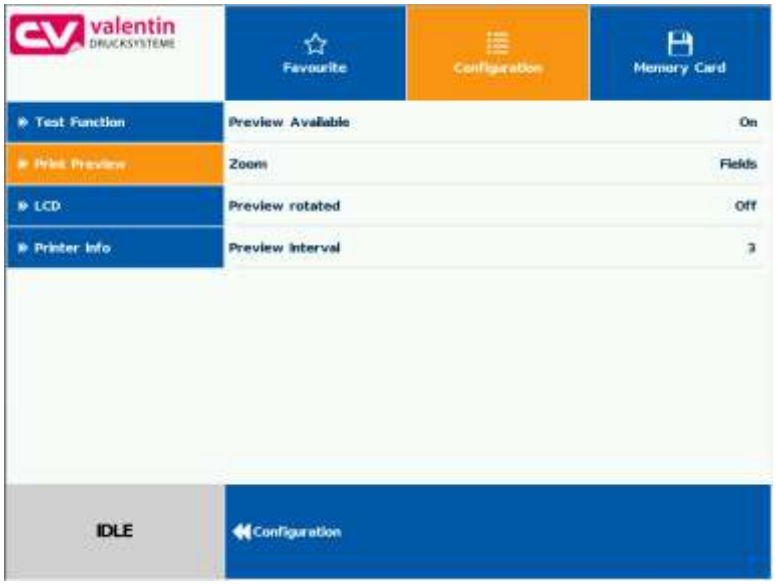

Print preview activated On/Off

With activated print preview a picture of the currently printed layout is shown on the display. If the function is not activated, the field remains empty.

Print preview – Zoom

Selection of a certain zoom value for the representation of print preview.

Label: The complete layout is fit to the indication zone.

Fields: Only the print range is fit to the indication zone.

1 .. 8: Manual zoom factor to scale the complete layout down.

Print preview – Preview rotated

The display of label preview can be rotated on the touch-screen display.

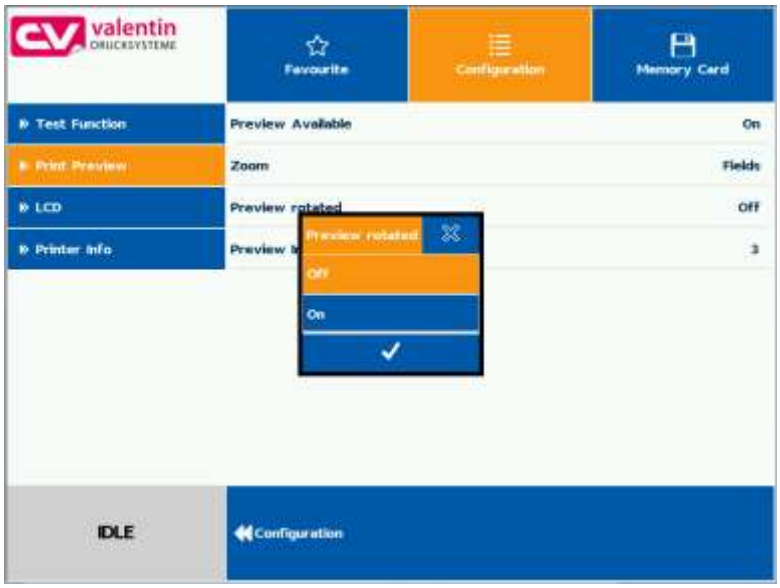

On: The label preview is shown rotated by 180° on the display.

Off: The label preview is represented in read direction.

Print preview – Interval

During a running print order the preview is refreshed in the set interval.

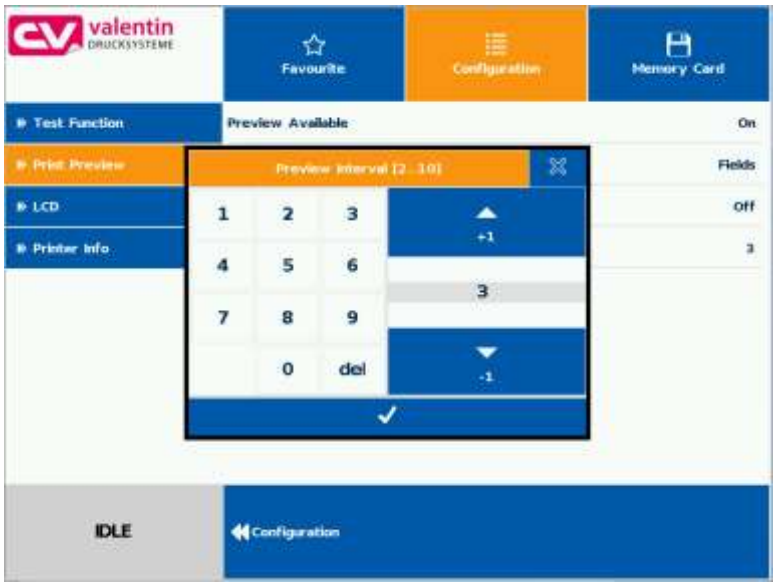

Value range: 0 .. 10 seconds

Maintenance - LCD

In the LCD maintenance sector, different parameters ro the touch-screeen display can be set.

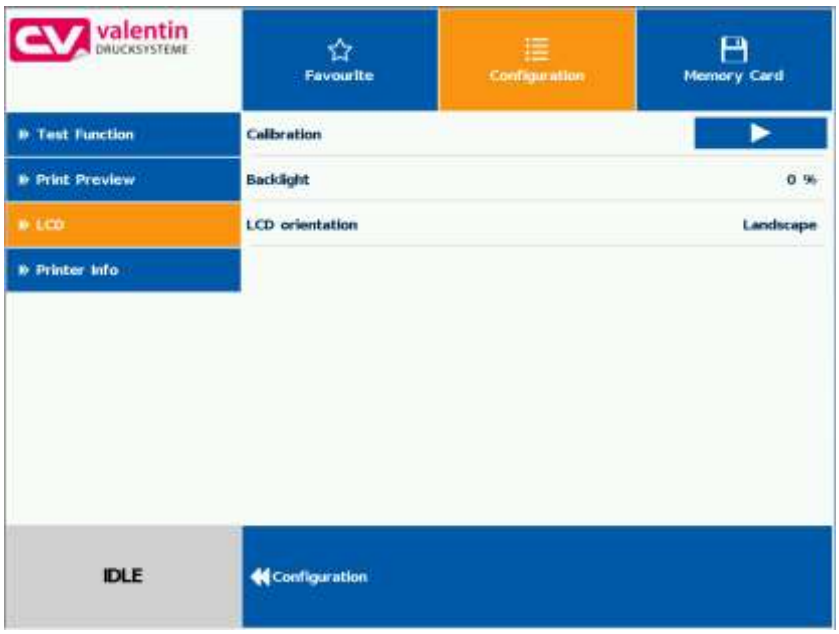

LCD - Backlight

Value range: 0 .. 100 %.

LCD - Orientation

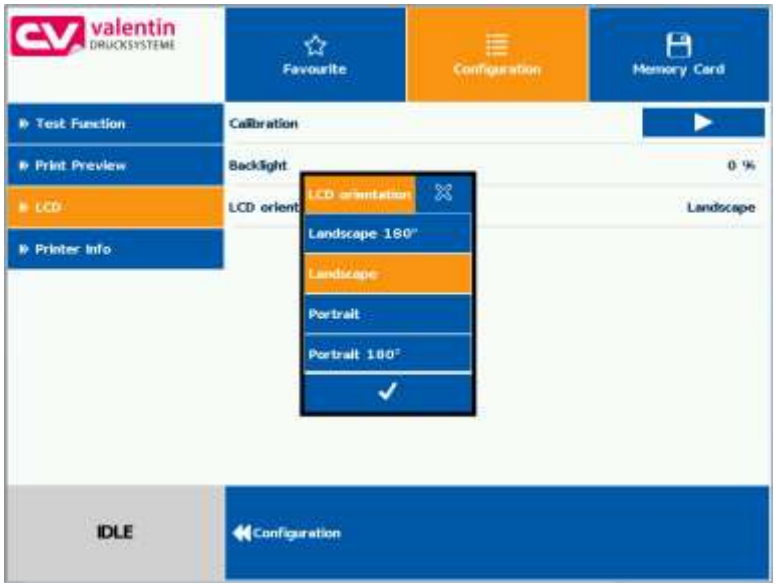

Landscape 180°: The display is represented turned by 180 degres to the function 'Landscape'.

Landscape: The display is represented turned by 90 degres to the reading direction.

Portrait: The display is represented in reading direction.

Portrait 180°: The display is represented turned by 180 degres.

Maintenance - System settings

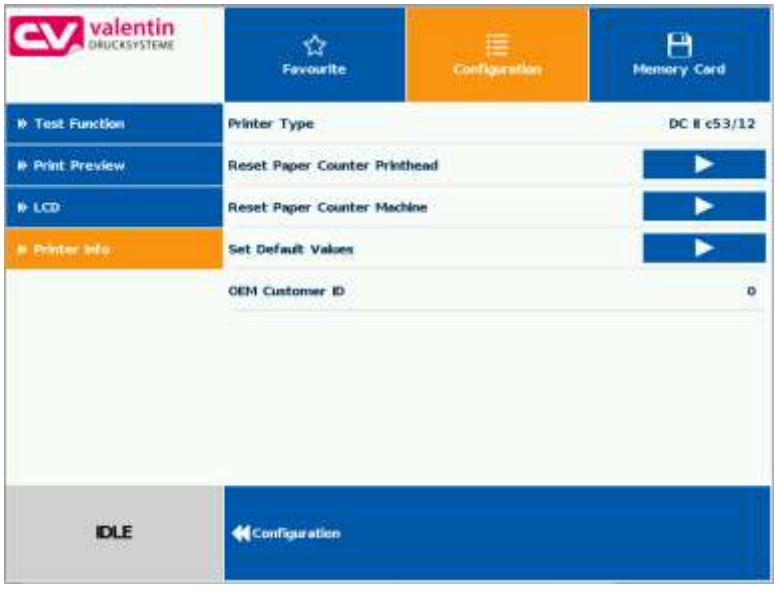

Different system settings such as set printer type, reset paper counter etc. can be made.

However, for the settings the corresponding password is necessary.

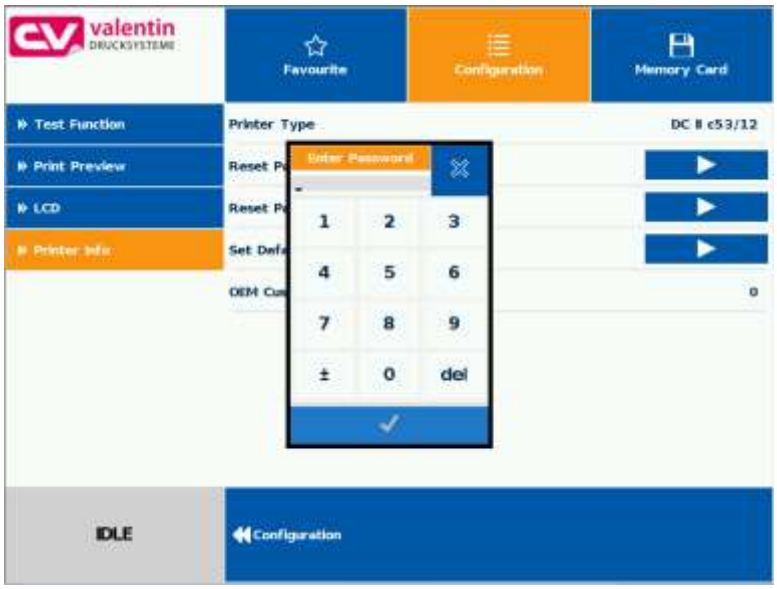

10.8 Process Data

Activation of display for process data

In order to show the process data, the parameter must be activated before in the menu *Maintenance/Print preview*.

Add parameter to process data

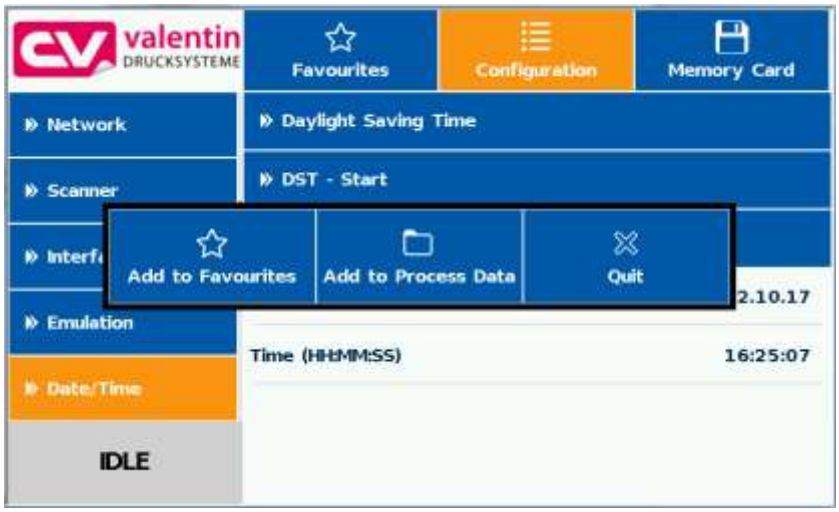

Press long (2 s) on a parameter (e.g. current time) to display the appropriate selection.

Press *Add to process data* to add the selected parameter to the process data list.

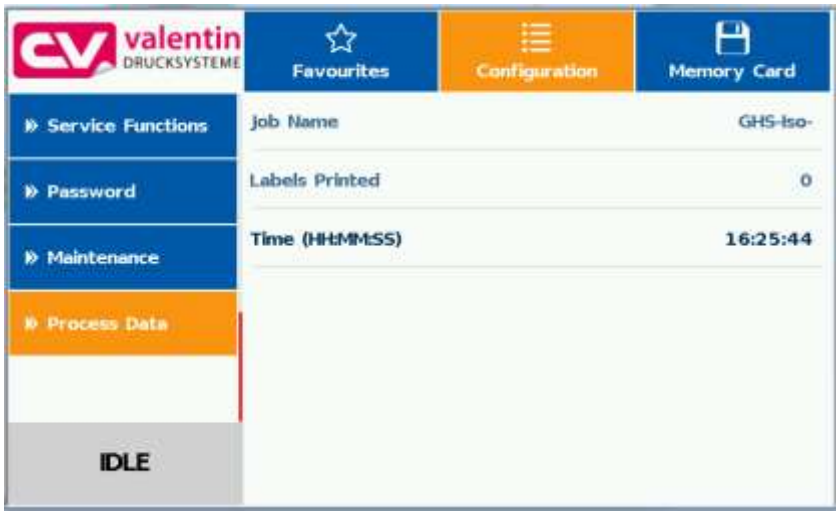

Remove parameter from process data

Press long (2 s) on a parameter (e.g. current time) to display the appropriate selection. Press *Remove from process data* to remove the selected parameter from the process data list.

Change of display vies Process data – Print preview

With activated print preview, the display shows a picture of the currently printed layout. The change to the process data view is effected by wiping to the right.

With activated print preview on the display a picture of the up-to-date printed layout is shown.

10.9 Memory Menu

Compact Flash Card USB Stick

On the left side, the content of the currently selected directory is shown one below the other.

The preview zone in on the right side is. If available, the preview of the selected layout is shown.

Load: The selected layout is loaded. After the number of copies have been entered, the print order is started.

Admininstrative tools: Switching to the file manager (File Explorer).

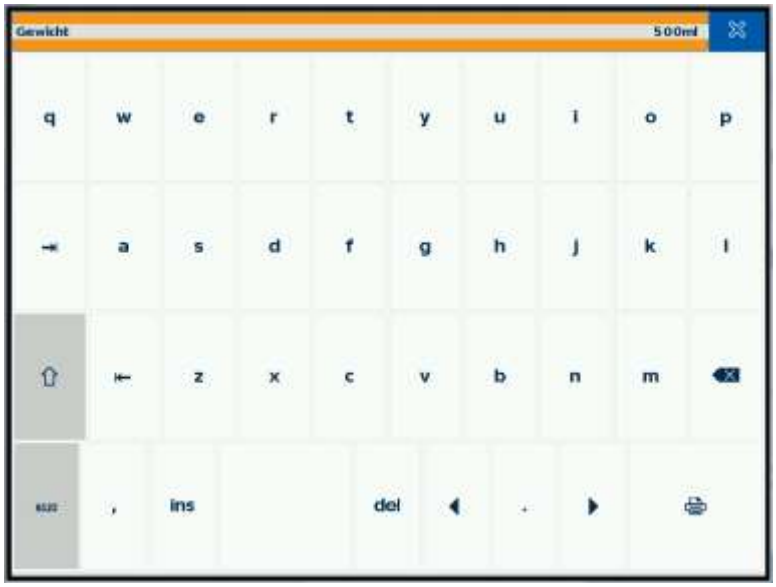

The user query can be entered at the cursor position.

Press to change to the input of number of copies.

Number of copies

Enter the number of layouts to be printed.

10.10 Information Zone

By pressing the **Info** button the versions of the installed components are displayed.

By pressing the **Info** button once more, the Home view is again displayed.

10.11 Change to Foil Keyboard

Press long (> 3 s) on the company logo left above, and the display changes to the indication of a conventionalize foil keyboard. The settings can be done by the standard operating panel. Press . to change to the previous view.

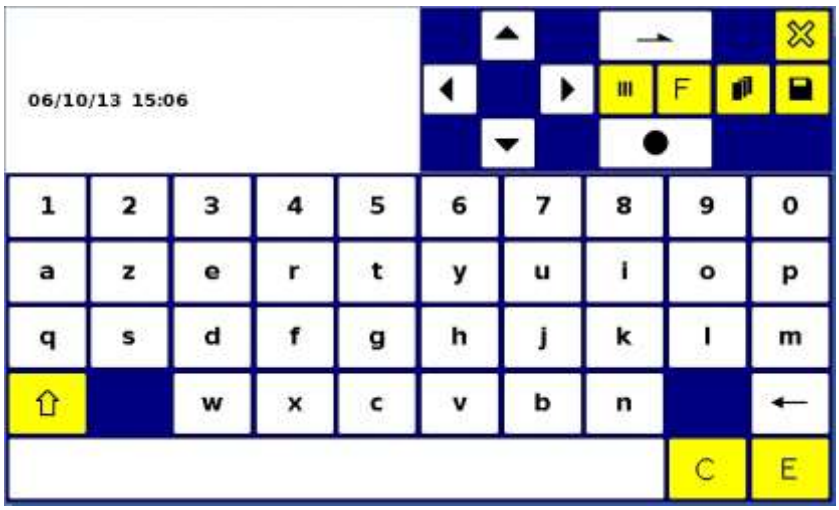

For more information about the use of printer and its foil keyboard can be found in chapter 9.

11 Maintenance and Cleaning

DANGER!

Risk of death by electric shock!

⇒ Before opening the housing cover, disconnect the printing system from the mains supply and wait for a moment until the power supply unit has discharged.

NOTICE!

When cleaning the label printer, personal protective equipment such as safety goggles and gloves are recommended.

Maintenance plan

Maintenance task	Frequency
General cleaning (see chapter 11.1, page 127).	As necessary.
Clean the transfer ribbon roller (see chapter 11.2, page 128).	Each time the transfer ribbon is changed or when the printout is adversely affected.
Clean the printhead (see chapter 11.3, page 127).	Each time the transfer ribbon is changed or when the printout is adversely affected.
Replace the printhead (see chapter 11.4, page 129).	In case of errors in printout.

NOTICE!

The handling instructions for the use of Isopropanol (IPA) must be observed. In the case of skin or eye contact, immediately wash off the fluid thoroughly with running water. If the irritation persists, consult a doctor. Ensure good ventilation.

11.1 General Cleaning

CAUTION!

Abrasive cleaning agents can damage the direct print module!

⇒ Do not use abrasives or solvents to clean the outer surface of the direct print module.

⇒ Remove dust and paper fuzz in the printing area with a soft brush or vacuum cleaner.

⇒ Clean the outer surfaces with an all-purpose cleaner.

11.2 Clean the Transfer Ribbon Roller

A soiled ribbon roller can lead to reduced print quality and can affect transport of material.

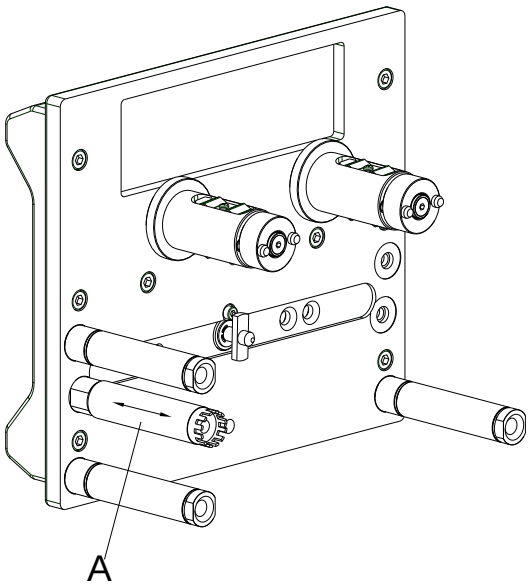

Figure 33

1. Remove the transfer ribbon cassette.
2. Remove deposits with the roller cleaner and a soft cloth.
3. If the roller (A) appears damaged, replace it.

11.3 Clean the Printhead

Printing can cause accumulation of dirt at printhead e.g. by colour particles of transfer ribbon, and therefore it is necessary to clean the printhead in regular periods depending on operating hours, environmental effects such as dust etc.

CAUTION!

Printhead can be damaged!

⇒ Do not use sharp or hard objects to clean the printhead.

⇒ Do not touch protective glass layer of the printhead.

1. Remove the transfer ribbon cassette.
2. Clean the printhead surface with a special cleaning pen or a cotton swab dipped in pure alcohol.
3. Before using the printing system, let the printhead dry for about two to three minutes.

11.4 Replace the Printhead

CAUTION!

The printhead can be damaged by static electricity discharges and impacts!

⇒ Set up the device on a grounded, conductive surface.

⇒ Ground your body, e.g. by wearing a grounded wristband.

⇒ Do not touch the contacts on the plug connections.

⇒ Do not touch the printhead with hard objects or your hands.

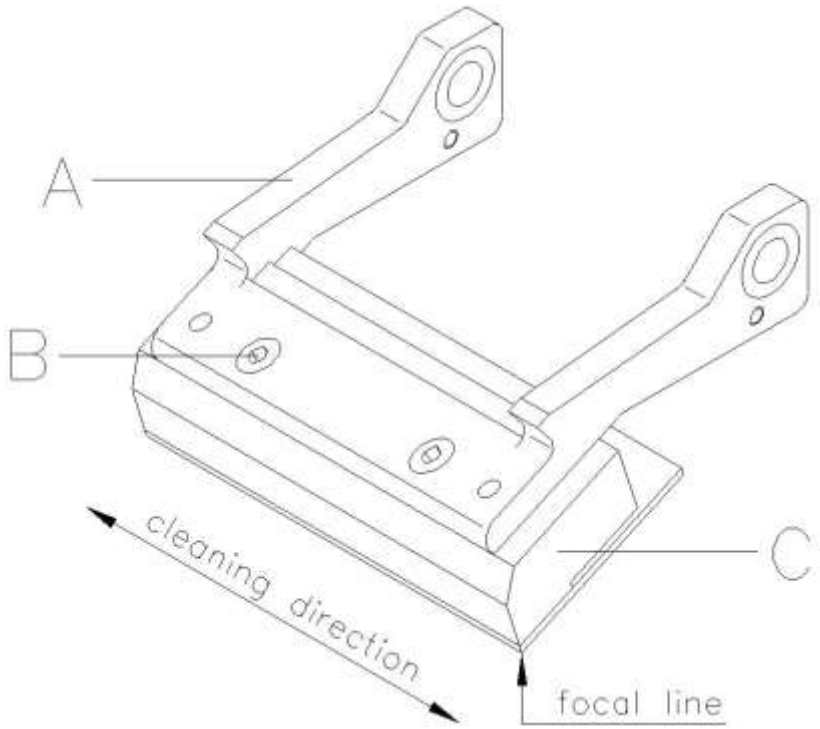

Figure 34

Remove the printhead

1. Remove the ribbon cassette.
2. Move the printhead unit in an appropriate service position.
3. Press the printhead support (A) slightly downwards until an Allen key can be inserted in the screws (B).
4. Remove the screws (B) and afterwards the printhead (C).
5. Remove the rear-mounted connection assembly from the printhead.

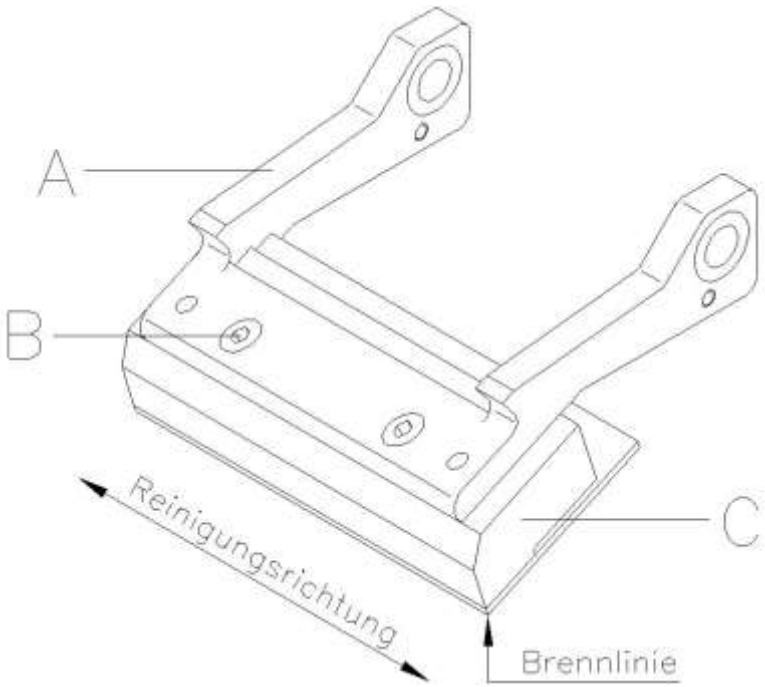

Figure 35

Install the printhead

1. Insert the connection assembly to the new printhead.
2. Position the printhead in the printhead support (A), so the engaging pieces catch in the appropriate holes in the printhead support (A).
3. Hold the printhead holder (A) with a finger slightly on the pressure roll and check the correct position of printhead (C).
4. Screw in the screw (B) and tighten it with an Allen key.
5. Insert again ribbon cassette (see chapter 8, page 45).
6. Enter the resistance value of the new printhead in the menu *Service Functions/Heater resistance*. The value is indicated on the type plate of printhead.
7. Start a test print to check printhead position.

11.5 Angle Adjustment (Intermittent Mode)

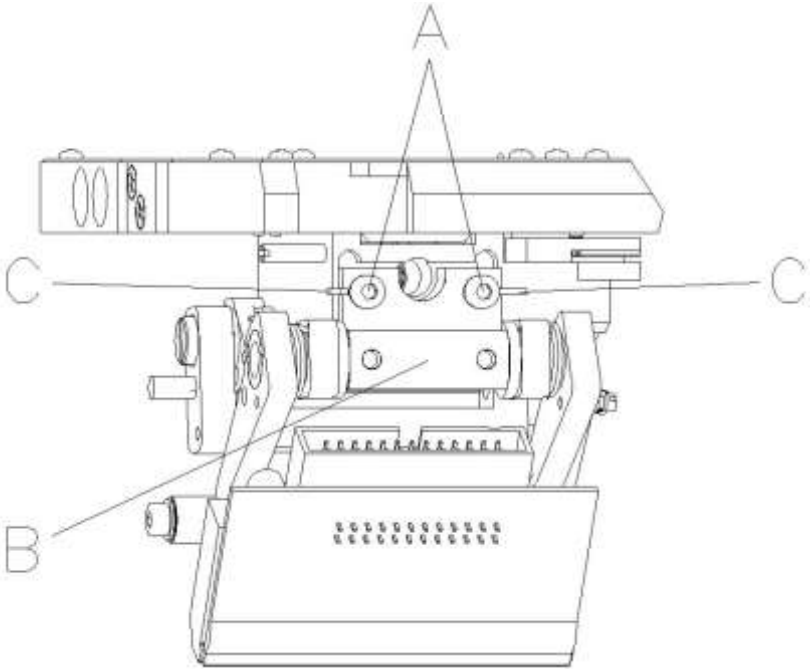

Figure 36

The installation angle of the printhead is default 26° to the print surface. However, manufacturing tolerances of printhead and mechanics can require another angle.

CAUTION!

Damage of printhead by unequal use!

Higher wastage of ribbon by faster ripping.

⇒ Only change the factory settings in exceptional cases.

1. Loosen slightly two Allen head screws (A).
2. Move the adjusting part (B) to adjust the angle between the printhead and the printhead support.
   move downwards = decrease angle
   move upwards = increase angle
3. Tighten again the Allen head screws (A).
4. Start a print order with approx. three layouts to check the correct unwrinkled ribbon run.

NOTICE!

The slots (C) serve for position control. Pay attention to a parallel adjustment.

11.6 Print Quality Optimisation

The following table shows some possibilities to improve the print quality.
Generally you have to note: the higher the print speed the lower the print quality.

Problem	**Mögliche Behebung**
Regular inferior print quality	• Increase the contrast • Increase the pressure • Reduce the print speed • Reduce the transfer ribbon speed • Reduce the distance between the printhead and the print surface • Change the combination of the transfer ribbon and the print medium • Control the print surface (hardness) • Change the printhead angle
Partial inferior print quality (on one side)	• Align the surface parallel to the printhead • Set the regular transfer ribbon tension • Set the regular printhead angle
Partial inferior print quality (periodical)	• Sand and smooth the surface • Reinforce the surface against bending

11.7 Cycle Optimisation (Intermittent Mode)

NOTICE!

The cycle is a finished print cycle per a unit of time.

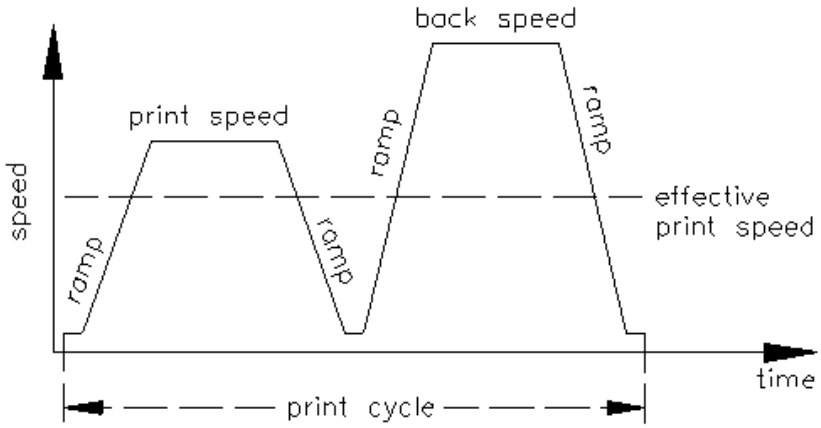

Figure 37

In case of 'time critical' applications you have the possibility with a good selection of different device parameters to increase the effective print speed and it this way the clock cycle.

- Generally increase the print speed.
- Generally increase the back speed.
- Increase the acceleration and brake ramp.
- Change the zero point of the machine.
- Avoid vertical installation position of the print mechanics. Install the machine in horizontal position.
- Control the short distance between the printhead and the print surface.
- Switch off the foil saving automatic.
- Optimise the layout to a short print way, i.e. less blanks, no borders at the top res. bottom, rotate the layout.

12 Signal Diagrams

12.1 Continuous Mode

NOTICE!
The line 'data receipt' indicates when the direct print module receives data.

Dispenser mode: Dynamic

Number of layouts per print order: 1
Data memory: standard
Ribbon saving: On
Trigger input print start: increasing slope

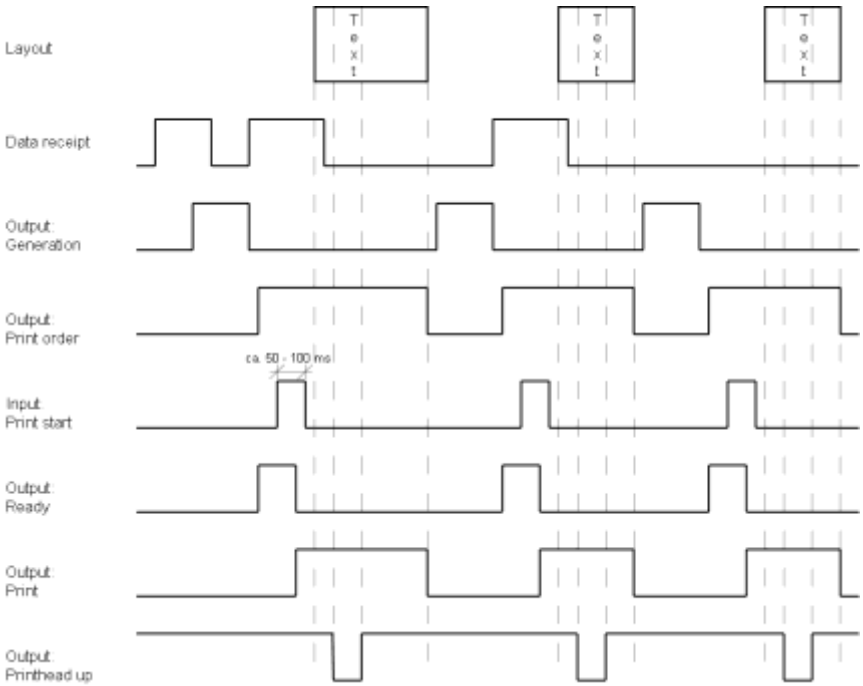

Figure 38

Layout

In 'dispenser mode: dynamic' the layout distance onto the material is not determined by the layout length but by the time between start impulse and print start input.

Because of the fact that the setting 'data memory: standard' the next print order is generated after the previous one is finished and a print order is only finished after the feed of the complete layout, the smallest possible time between two start impulses depends also from the layout length.

In case the printable data is only at the beginning of the layout and the rest of the layout is empty, then the time of start impulse by minimising the layout length (not for 'data memory: extended') can be decreased.

Data receipt

As soon as the generation of a layout is finished, a new one is send to the direct print module. The time of receipt for the first layout is normally shorter because at this time the direct print module has no further action. At receipt of the following layout, the time of receipt is longer because the direct print module receives data and prints at the same time.

Number of layouts per print order: 1
Data memory: extended
Ribbon saving: On
Trigger input print start: increasing slope

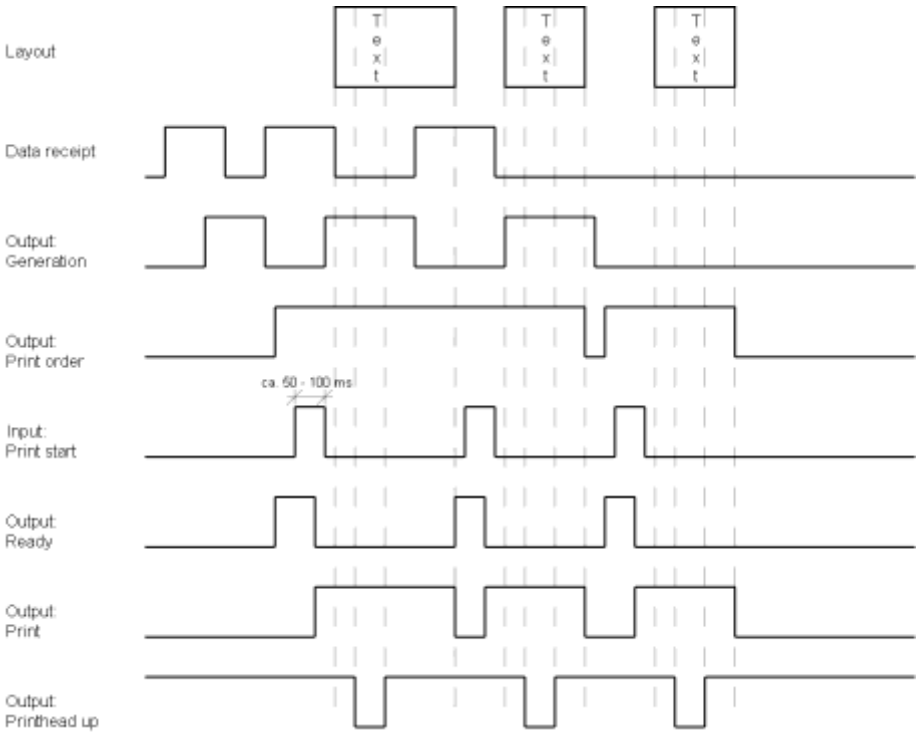

Figure 39

Layout For a better comparison we used the same layouts as before.

Data receipt As soon as the generation of the layout is finished a new one is send to the direct print module.

Data receipt/ generation The time of receipt for the first layout is normally shorter because at this time the direct print module has no further action. At receipt of the following layout, the time of receipt is longer because the direct print module receives data and prints at the same time.

Generation In mode 'data memory: extended' already received data is always generated after the start of a print order.

Print order Before the current print order is finished the next one is already generated. The signal output is therefore active and the next start impulse can be send.

Print Before the next start impulse is send, the print has to be finished as otherwise the impulse is ignored.

Number of layouts per print order: 3
Data memory: Off/standard/extended
Ribbon saving: On
Trigger input print start: increasing slope

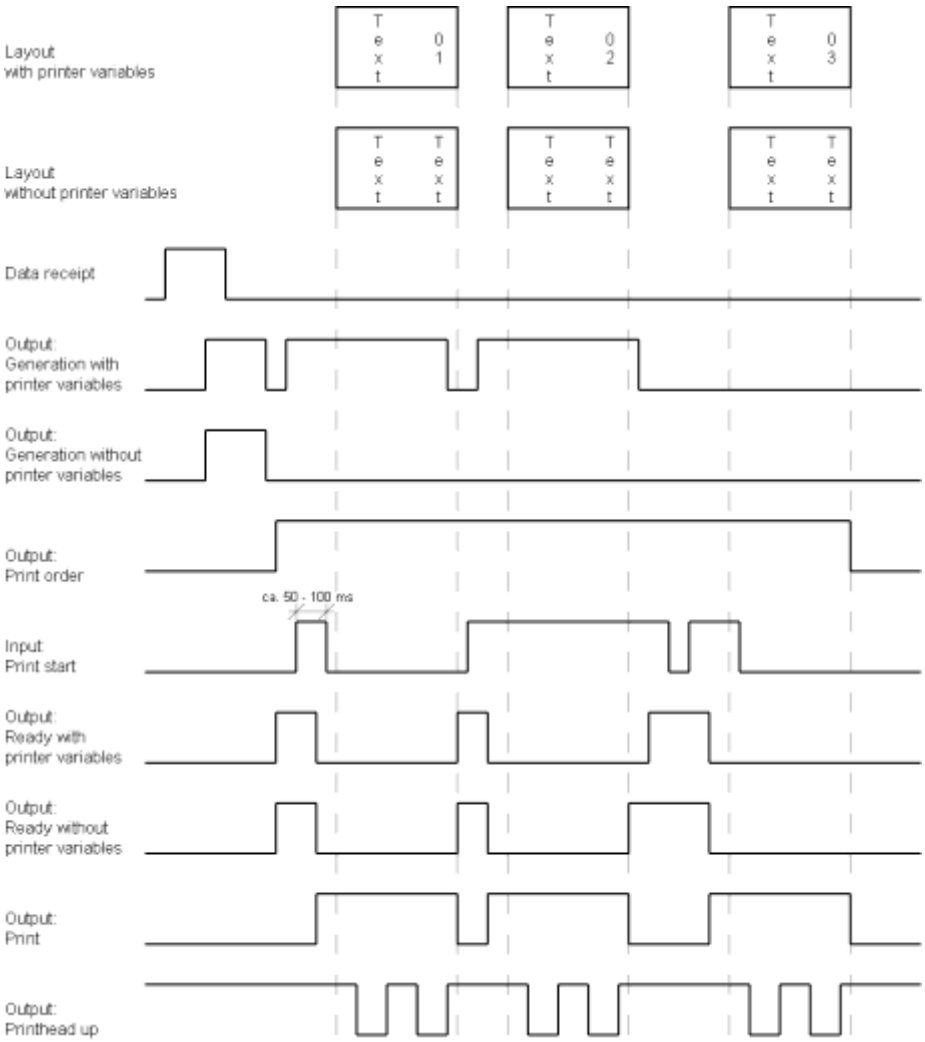

Figure 40

Layout/generation with module variables

The use of printer variables means that each layout is different and the direct print module has to generate several parts of the layout anew, e.g. variable counter.

Layout/generation without module variables

Each of the 3 layouts which are to print are the same and therefore it is only necessary to generate the layout once.

Data receipt

Because only 1 print order is send, the direct print module has only to receive once.

Print order

As the print order consists of 3 layouts, the print order output is active as long as all 3 layouts are printed.

Print start/print

In dispenser mode dynamic only the slope of the start impulse is recognised as valid print start signal. However, the impulse should have a minimum impulse width of 50 ms.

Dispenser Mode: Static

Number of layouts per print order: 4
Data memory: Off/standard/extended
Ribbon saving: On
Trigger input print start: level High

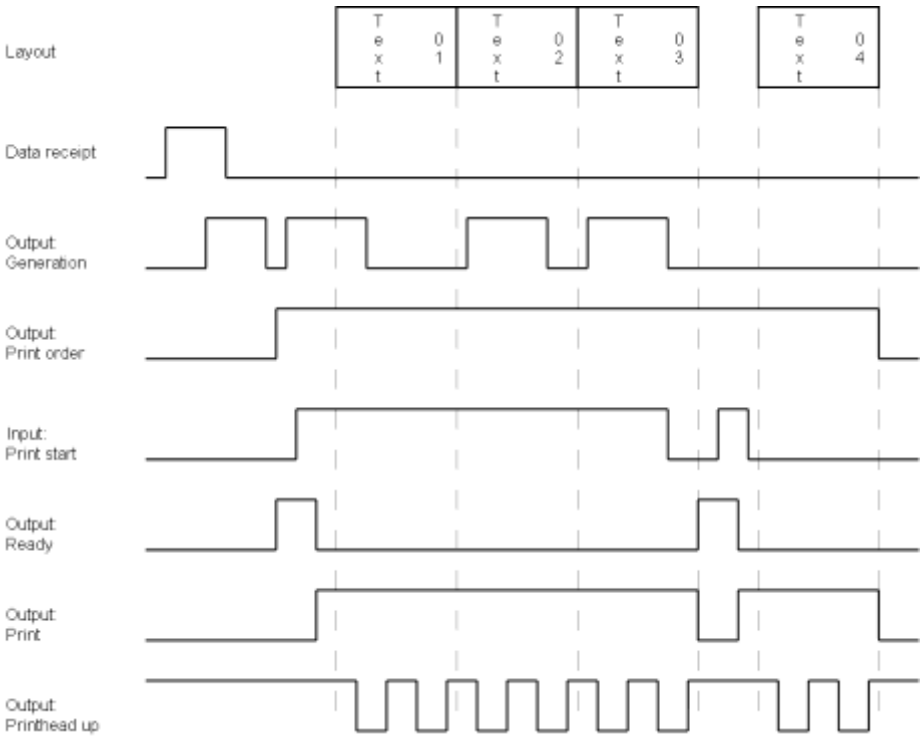

Figure 41

Layout

4 layouts with counter.

Print start/print

In 'dispenser mode: static' the level of the start impulse is recognised as valid start signal. In case the level is activated then the print is continued immediately if the following layout is already generated. After deleting the signal, the machine prints until the end of the current layout and then the direct print module waits for the next start impulse.

12.2 Intermittent Mode

Mode 1 (single item processing)

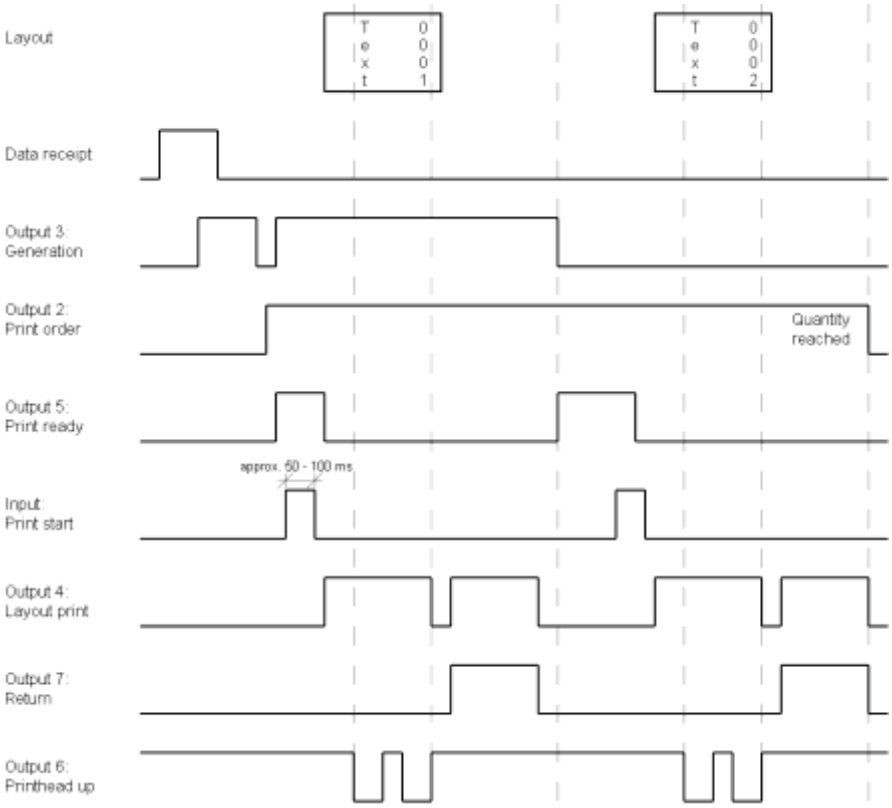

Figure 42

Mode 2 (continuous mode)

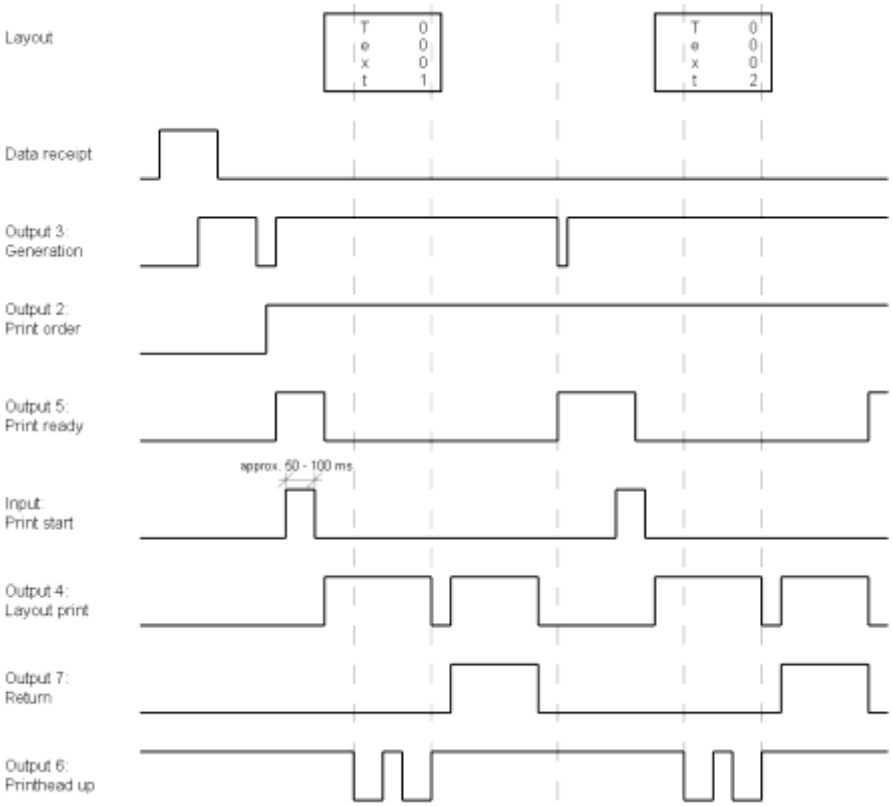

Figure 43

13 Error Correction

Error message	Cause	Remedy
1 Line too high	Line rises up completely or partly over the upper edge of label.	Move line down (increase Y value). Check rotation and font.
2 Line too low	Line rises up completely or partly over the bottom edge of label.	Move line up (reduce Y value). Check rotation and font.
3 Character set	One res. several characters of the text is res. are not available in the selected font.	Change text. Change font.
4 Unknown BC type	Selected code is not available.	Check code type.
5 Illegal rotation	Selected rotation is not available.	Check rotation.
6 CV font	Selected font is not available.	Check font.
7 Vector font	Selected font is not available.	Check font.
8 Measuring label	While measuring no label was found. Set label length is too large.	Check label length and if labels are inserted correctly. Restart measuring anew.
9 No label found	No label available. Soiled label photocell. Labels not inserted correctly.	Insert new label roll. Check if labels are inserted correctly. Clean the label photocell.
10 No ribbon	During the print order the ribbon roll becomes empty. Defect at the transfer ribbon photocell.	Change transfer ribbon. Check transfer ribbon photocell (service functions).
11 COM FRAMING	Stop bit error.	Check stop bits. Check baud rate. Check cable (printer and PC).
12 COM PARITY	Parity error.	Check parity. Check baud rate. Check cable (printer and PC).
13 COM OVERRUN	Loss of data at serial interface (RS-232).	Check baud rate. Check cable (printer and PC).

Error message	Cause	Remedy
14 Field number	Received line number is invalid.	Check sent data. Check connection PC - printer.
15 Length mask	Invalid length of received mask statement.	Check sent data. Check connection PC - printer.
16 Unknown mask	Transferred mask statement is invalid.	Check sent data. Check connection PC - printer.
17 Missing ETB	No end of data found.	Check sent data. Check connection PC - printer.
18 Invalid character	One res. several characters of the bar code is res. are not valid.	Change bar code data. Change font.
19 Invalid statement	Unknown transferred data record.	Check sent data. Check connection PC - printer.
20 Invalid check digit	For check digit control the entered res. received check digit is wrong.	Calculate check digit anew. Check code data.
21 Invalid SC code	Selected SC factor is invalid for EAN res. UPC.	Check SC factor.
22 Invalid number of digits	Entered digits for EAN res. UPC are invalid < 12; > 13.	Check number of digits.
23 Type check digit	Selected check digit calculation is not available in the bar code.	Check calculation of check digit. Check bar code type.
24 Invalid extension	Selected zoom factor is not available.	Check zoom factor.
25 Offset sign	Entered sign is not available.	Check offset value.
26 Offset value	Entered offset value is invalid.	Check offset value.
27 Printhead temperature	Printhead temperature is too high. Defective printhead sensing device.	Reduce contrast. Change printhead.
28 Cutter error	With cut an error occurred. Paper jam.	Check label run. Check cutter run.
29 Invalid parameter	Entered data do not correspond to the characters allowed from the application identifier.	Check code data.

Error message	Cause	Remedy
30 Application Identifier	Selected application identifier is not available in GS1-128.	Check code data.
31 HIBC definition	Missing HIBC system sign. Missing primary code.	Check definition of HIBC code.
32 System clock	Real Time Clock function is selected but the battery is empty. Defective RTC.	Change battery. Change RTC component.
33 No CF interface	Interrupted connection CPU - CF card. Defective CF card interface.	Check connection CPU - CF card interface. Check CF card interface.
34 No print memory	Not enough print memory available.	Check CF assembly on CPU.
35 Printhead open	At start of a print order the printhead is open.	Close the printhead and start print order anew.
36 BCD invalid format	BCD error Invalid format for the calculation of Euro variable.	Check entered format.
37 BCD overflow	BCD error Invalid format for the calculation of Euro variable.	Check entered format.
38 BCD division	BCD error Invalid format for the calculation of Euro variable.	Check entered format.
39 FLASH ERROR	Flash component error.	Run a software update. Change CPU.
40 Length command	Invalid length of the received command statement.	Check data sent. Check connection PC - printer.
41 No drive	CF card not found / not correctly inserted.	Insert CF card correctly.
42 Drive error	Impossible to read CF card (faulty).	Check CF card, if necessary change it.
43 Unformatted	CF Card not formatted.	Format CF card.
44 Delete directory	Attempt to delete the actual directory.	Change directory.
45 Invalid path	Too long indication of path.	Indicate a shorter path.

Error message	Cause	Remedy
46 Drive write-protected	Memory card is write-protected.	Deactivate write protection.
47 Directory not file	Attempt to indicate a directory as file name.	Correct your entry.
48 File already open	Attempt to change a file during an access is active.	Select another file.
49 No file/directory	File does not exist on CF card.	Check file name.
50 Invalid file name	File name contains invalid characters.	Correct entry of name, remove special characters.
51 Internal file error	Internal file system error.	Please contact your distributor.
52 Root full	The max. number (64) of main directory entries is reached.	Delete at least one main directory entry and create subdirectories.
53 Drive full	Maximum CF capacity is reached.	Use new CF Card, delete no longer required files.
54 File/directory exists	The selected file/directory already exists.	Check name, select a different name.
55 File too large	During copying procedure not enough memory space onto target drive available.	Use a larger target card.
56 No update file	Errors in update file of firmware.	Start update file anew.
57 Invalid graphic file	The selected file does not contain graphic data.	Check file name.
58 Directory not empty	Attempt to delete a not empty directory.	Delete all files and sub-directories in the desired directory.
59 No CF interface	No CF card drive found.	Check connection of CF card drive. Contact your distributor
60 No media	No CF card is inserted.	Insert CF card in the slot.
61 Webserver error	Error at start of web server.	Please contact your distributor.
62 Wrong PH FPGA	The direct print module is equipped with the wrong FPGA.	Please contact your distributor.
63 End position	The label length is too long. The number of labels per cycle is too much.	Check label length res. the number of labels per cycle.

Error message	Cause	Remedy
64 Zero point	Defective photocell.	Change photocell.
65 Compressed air	Pressure air is not connected.	Check pressure air.
66 External release	External print release signal is missing.	Check input signal.
67 Column too wide	Wrong definition of column width res. number of columns.	Reduce the column width res. correct the number of columns.
68 Scanner	The connected bar code scanner signals a device error.	Check the connection scanner/printer. Check scanner (dirty).
69 Scanner NoRead	Bad print quality. Printhead completely soiled or defective. Print speed too high.	Increase contrast. Clean printhead or replace (if necessary). Reduce print speed.
70 Scanner data	Scanned data does not correspond to the data which is to print.	Replace printhead.
71 Invalid page	As page number either 0 or a number > 9 is selected.	Select a number between 1 and 9.
72 Page selection	A page which is not available is selected.	Check the defined pages.
73 Undefined page	The page is not defined.	Check the print definition.
74 Format user guiding	Wrong format for customized entry.	Check the format string.
75 Format date/time	Wrong format for date/time.	Check the format string.
76 Hotstart CF	No CF card found.	If option hotstart was activated, a CF card must be inserted. Switch off the printer before inserting the memory card.
77 Flip/Rotate	Selection of print of several columns and also mirror/rotate.	It is only possible to select one of both functions.
78 System file	Loading of temporary hotstart files.	Not possible.
79 Shift variable	Faulty definition of shift times (overlapping times).	Check definition of shift times.
80 GS1 Databar	General GS1 Databar error.	Check definition and parameter of GS1 Databar code.
81 IGP error	Protocol error IGP.	Check sent data.

Error message	Cause	Remedy
82 Time generation	Printing creation was still active at print start.	Reduce print speed. Use printers' output signal for synchronization. Use bitmap fonts to reduce generating time.
83 Transport protection	Both DPM position sensors (start/end) are active.	Displace zero point sensor Check sensors in service functions menu
84 No font data	Font and web data is missing.	Run a software update.
85 No layout ID	Layout ID definition is missing.	Define layout ID onto the label.
86 Layout ID	Scanned data does not correspond to defined ID.	Wrong label loaded from CF card.
87 RFID no label	RFID unit cannot recognize a label.	Displace RFID unit or use an offset.
88 RFID verify	Error while checking programmed data.	Faulty RFID label. Check RFID definitions
89 RFID timeout	Error at programming the RFID label.	Label positioning. Faulty label.
90 RFID data	Faulty or incomplete definition of RFID data.	Check RFID data definitions.
91 RFID tag type	Definition of label data does not correspond with the used label.	Check storage partitioning of used label type
92 RFID lock	Error at programming the RFID label (locked fields).	Check RFID data definitions. Label was already programmed.
93 RFID programming	Error at programming the RFID label.	Check RFID definitions.
94 Scanner timeout	The scanner could not read the bar code within the set timeout time. Defective printhead. Wrinkles in transfer ribbon. Scanner wrong positioned. Timeout time too short.	Check printhead. Check transfer ribbon. Position scanner correctly, corresponding to the set feeding. Select longer timeout time.

Error message	Cause	Remedy
95 Scanner layout difference	Scanner data does not correspond to bar code data.	Check adjustment of scanner. Check scanner settings / connection.
96 COM break	Serial interface error.	Check settings for serial data transmission as well as cable (printer-PC).
97 COM general	Serial interface error.	Check settings for serial data transmission as well as cable (printer-PC).
98 No software printhead FPGA	No printhead-FPGA data available.	Please contact your responsible distributor.
99 Load software printhead FPGA	Error when programming printhead-FPGA.	Please contact your responsible distributor.
100 Upper position	Option applicator Sensor signal up is missing.	Check input signals / compressed-air supply.
101 Lower position	Option applicator Sensor signal down is missing.	Check input signals / compressed-air supply.
102 Vacuum plate empty	Option applicator Sensor does not recognize a label at vacuum plate.	Check input signals / compressed-air supply.
103 Start signal	Print order is active but device not ready to process it.	Check start signal.
104 No print data	Print data outside the defined label. Selection of wrong module type (design software).	Check selected module type. Check selection of left/right version.
105 Printhead	No original printhead is used.	Check the used printhead. Contact your distributor.
106 Invalid Tag type	Wrong Tag type. Tad data do not match the Tag type in the printer.	Adapt data or use the correct Tag type.
107 RFID inactive	RFID module is not activated. No RFID data can be processed.	Activate RFID module or remove RFID data from label data.
108 GS1-128 invalid	Transferred GS1-128 bar code is invalid.	Verify bar code data (see GS1-128 bar code specification).
109 EPC parameter	Error at EPC calculation.	Verify data (see EPC specification).

Error message	Cause	Remedy
110 Housing open	When starting the print order the housing cover is not closed.	Close the housing cover and start the print order anew.
111 EAN.UCC code	Transferred EAN.UCC code is invalid.	Verify bar code data (see corresponding specification).
112 Print carriage	Printing carriage does not move.	Check gear belt (possibly broken).
113 Applicator error	Option applicator Error while using applicator.	Check applicator.
114 Left position	Option applicator Left final position switch is not in correct position.	Check LEFT final position switch for correct function and position. Check function of pneumatics for cross traverse.
115 Right position	Option applicator Right final position switch is not in correct position.	Check RIGHT final position switch for correct function and position. Check function of pneumatics for cross traverse.
116 Print position	Option applicator: The applicator is not in the print position when trying to print a label.	Check TOP and RIGHT final position switch for correct function and position. Check pneumatics for function
117 XML parameter	The parameters in the XML file are not correct.	Please contact your responsible distributor.
118 Invalid variable	Transferred variable is invalid with customized entry.	Select correct variable without customized entry and transfer it.
119 No ribbon	During the print order the ribbon roll becomes empty. Defect at the transfer ribbon photocell.	Change transfer ribbon. Check transfer ribbon photocell (service functions).
120 Wrong directory	Invalid target directory when copying.	Target directory must not be within the source directory. Check target directory.
121 No label PH2	No label found at the rear printhead (DuoPrint). Soiled label photocell. Labels not inserted correctly.	Insert new label roll. Clean the label photocell. Check if labels are inserted correctly.
122 IP occupied	The IP address was already assigned.	Assign a new IP address.

Error message	Cause	Remedy
123 Print asynchronous	The label photocell does not work in the order as it is expected according to print data. The settings of the photocell are not correct. Settings of label size and gap size are not correct. No label found at the rear printhead. Soiled label photocell. Labels not inserted correctly.	Check label size and gap size. Check label photocell settings. Check correct loading of label material. Insert new label roll. Clean the label photocell. Check if labels are inserted correctly.
124 Speed too low	The print speed is too slow.	Increase the speed of customers' machine.
125 DMA buffer	Communication problem HMI.	Restart the printer.
126 UID conflict	Configuration RFID programming faulty.	Run RFID initialising.
127 Module not found	RFID module not available.	Check the RFID module connection. Please contact your responsible distributor.
128 No release signal	No print release by higher-level control (customer machine).	Activate release signal at the higher-level control.
129 Wrong firmware	Firmware does not match the used printer type.	Use firmware that fits to the printer type. Please contact your responsible distributor.
130 Language missing	Language file for the set printer language is not available.	Please contact your responsible distributor.
131 Wrong material	Label material does not fit to printing data.	User label material with suitable label and/or gap length.
132 Invalid mark-up tag	Invalid mark-up formatting characters in text.	Correct the formatting characters in the text.
133 Script not found	LUA script file not found.	Check the file name.
134 Script failure	LUA script is incorrect.	Check the script.

Error message	Cause	Remedy
135 Script user error	Error in LUA script user input.	Correct the input value.
136 No reprint available	No label data for reprinting available.	Send new label data to the printer.
137 Printhead short circuit	Electrical short at the printhead.	Check the used printhead. Please contact your distributor.
138 Too less ribbon	Transfer ribbon ends.	Change transfer ribbon.
139 Hardware error	A hardware component could not be found.	Please contact your responsible distributor.

14 Additional Information

14.1 Hotstart

NOTICE!

The data is saved onto CF card. Therefore the CF card is a condition for the *Hotstart* menu item.

The function *Hotstart* contains e.g. that in case of a power failure the currently loaded layout can be further processed without any loss of data. Moreover a print order can be interrupted and to be continued after switching on the direct print module anew.

NOTICE!

At an active *Hotstart* all necessary data is stored on the CF card therefore do not remove the card during operation. When removing during operation, this causes the loss of all data on the CF card.

Save current layout

In case the *Hotstart* function is set to on, at the start of a print order the data of the current layout is saved to the corresponding directory of the CF card.
However the following conditions have to be fulfilled:

- CF card inserted in drive A.
- CF card not write-protected.
- Enough free storage space onto CF card.

An error message appears in case these conditions are not fulfilled.

Save print order state

At switching off the direct print module the state of the current print order is saved to the corresponding directory of the CF card.
However the following conditions have to be fulfilled:

- CF card inserted in drive A.
- CF card not write-protected.
- Enough free storage space onto CF card.

Load layout and print order state

When restarting the direct print module (if the function *Hotstart* is activated) the saved layout data and the status of print order were loaded from the corresponding file on the CF card. Because of this reason, when switching on the direct print module a CF card has to be inserted in the appropriate drive. If the data cannot be loaded an error message appears.

Start print order

In case at switching off the direct print module a print order was active, then a print start is released automatically and the required res. actual number of printed layouts is refreshed. In case the print order was stopped at switching off the direct print module, it is again set to the stopped mode after switching on the direct print module anew. In case a customized entry was active during switching off the direct print module, the window for the first customized variable is displayed.

Refresh variable counter

As in the intended file only the start values of the counter are saved, they are refreshed at a new start of the print order by means of the number of printed layouts. Each counter is counted corresponding from its start value. Afterwards the position of the current and the next counter update are correctly set by means of the update intervals.

NOTICE

Make sure that in case graphics are onto the layout they have to be saved onto CF card.

14.1 Cycles for the continuous mode

sa/mm: The smallest possible distance between two prints with full ribbon saving (the print offset must be set to the minimum value).

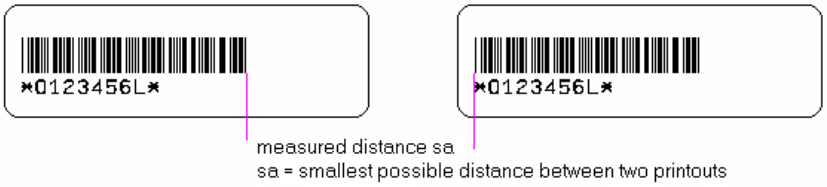

Example 1:

Layout: 75 mm printing surface sa at 200 mm/s = 30 mm

The total distance that can be covered in one minute at 200 mm/s:

s = v * t = 200 mm/s * 60 s = 12 m.

A path of print length + sa = 75 mm + 30 mm = 105 mm is required for a printout. The result is the number of cycles of 12 m / 105 mm = 114 prints per minute.

Example 2:

Bag length: 300 mm

Print length: 40 mm

What is the maximum print speed for Dynacode II 53?

sa = 300 mm - 40 mm = 260 mm

Search in the tables for sa: 260 mm

The table Dynacode II c53, transfer ribbon length 900 m (page 153) indicates that the maximum print speed is approx. 650 mm/s.

Cycles in continuous mode for Dynacode II 53

Speed in mm/s	Transfer ribbon length 900 m sa in mm	600 m sa in mm	450 m sa in mm	300 m sa in mm
50	7	6	6	6
60	7	7	6	6
70	7	7	6	6
80	7	7	6	6
90	7	7	6	6
100	8	8	6	6
110	11	10	10	9
120	14	11	10	9
130	14	11	10	9
140	15	14	11	10
150	16	14	11	10
160	19	15	14	10
170	22	16	14	11
180	22	21	15	11
190	24	22	18	14
200	27	23	19	14
210	30	26	20	15
220	33	31	22	18
230	36	32	28	21
240	38	35	29	24
250	43	37	32	27
260	45	42	35	28
270	47	44	37	28
280	53	45	40	32
290	54	51	43	35
300	57	52	44	36
310	62	56	48	37
320	67	60	52	42
330	72	65	54	43
340	75	67	58	46
350	80	69	60	47
360	82	74	63	50
370	87	75	65	52
380	89	80	68	53
390	96	86	72	56
400	100	88	74	57
410	102	92	78	63
420	109	101	82	66
430	115	103	87	68

	Transfer ribbon length			
Speed in mm/s	**900 m sa in mm**	**600 m sa in mm**	**450 m sa in mm**	**300 m sa in mm**
440	121	105	89	69
450	123	110	93	72
460	129	116	95	74
470	136	120	100	78
480	141	123	104	79
490	146	128	108	80
500	153	133	110	86
510	156	138	114	88
520	169	144	120	94
530	172	150	125	96
540	177	156	129	99
550	184	159	135	103
560	189	165	137	105
570	196	171	142	108
580	201	176	145	112
590	208	181	150	116
600	216	186	154	120
610	222	194	161	122
620	232	201	167	129
630	243	210	175	135
640	249	217	181	139
650	262	225	184	142
660	270	230	192	148
670	278	240	199	154
680	289	247	206	159
690	301	258	215	164
700	308	261	218	171
710	319	273	227	175
720	333	283	235	183
730	345	294	244	190
740	352	302	249	195
750	367	310	259	201
760	375	320	265	204
770	389	332	274	212
780	401	338	282	220
790	411	350	291	227
800	427	360	299	232

Cycles in continuous mode for Dynacode II 107

Speed in mm/s	Transfer ribbon length 600 m sa in mm	450 m sa in mm	300 m sa in mm
50	8	7	6
60	8	7	7
70	8	7	7
80	9	7	7
90	9	7	7
100	12	8	8
110	15	11	10
120	18	14	11
130	21	14	11
140	24	15	14
150	25	16	14
160	29	19	15
170	33	22	16
180	37	22	21
190	39	24	22
200	44	27	23
210	49	30	26
220	55	33	31
230	57	36	32
240	63	38	35
250	68	43	37
260	74	45	42
270	79	47	44
280	84	53	45
290	91	54	51
300	96	57	52
310	102	62	56
320	109	67	60
330	113	72	65
340	120	75	67
350	124	80	69
360	128	82	74
370	134	87	75
380	140	89	80
390	143	96	86
400	149	100	88
410	157	102	92
420	164	109	101
430	172	115	103

	Transfer ribbon length		
Speed in mm/s	**600 m sa in mm**	**450 m sa in mm**	**300 m sa in mm**
440	178	121	105
450	184	123	110
460	192	129	116
470	198	136	120
480	204	141	123
490	213	146	128
500	219	153	133
510	227	156	138
520	236	169	144
530	244	172	150
540	251	177	156
550	261	184	159
560	266	189	165
570	277	196	171
580	285	201	176
590	294	208	181
600	301	216	186

Cycles in continuous mode for Dynacode II 128

Speed in mm/s	Transfer ribbon length 450 m sa in mm	300 m sa in mm
50	8	7
60	8	7
70	8	7
80	9	7
90	9	7
100	12	8
110	15	11
120	18	14
130	21	14
140	24	15
150	25	16
160	29	19
170	33	22
180	37	22
190	39	24
200	44	27
210	49	30
220	55	33
230	57	36
240	63	38
250	68	43
260	74	45
270	79	47
280	84	53
290	91	54
300	96	57
310	102	62
320	109	67
330	113	72
340	120	75
350	124	80
360	128	82
370	134	87
380	140	89
390	143	96
400	149	100
410	157	102
420	164	109
430	172	115
440	178	121
450	184	123

14.2 Cycles for the intermittent mode

Dynacode II 53:
Transfer ribbon length
900 m

C = cycles per minute
tP = print
tB = return
Back speed = 600 mm/s

print speed in mm/s		5	10	15	20	25	30	35	40	45	50	55	60	65	70	75
600	C:	315	260	230	206	193	181	171	162	153	150	142	136	133	127	122
	tP:	120	140	160	170	180	190	200	210	220	230	240	250	250	260	270
	tB:	70	90	100	120	130	140	150	160	170	170	180	190	200	210	220
550	C:	315	260	230	206	193	181	171	162	153	150	142	136	130	125	120
	tP:	120	140	160	170	180	190	200	210	220	230	240	250	270	270	280
	tB:	70	90	100	120	130	140	150	160	170	170	180	190	200	210	220
500	C:	315	260	230	206	193	181	171	162	153	146	139	133	127	122	117
	tP:	120	140	160	170	180	190	200	210	220	240	260	260	270	280	290
	tB:	70	90	100	120	130	140	150	160	170	170	190	190	200	210	220
450	C:	315	260	230	206	193	181	166	157	150	146	139	133	125	120	115
	tP:	120	140	160	170	180	190	210	220	230	240	250	260	280	290	300
	tB:	70	90	100	120	130	140	150	160	170	170	180	190	200	210	220
400	C:	315	260	230	206	193	176	166	157	146	142	136	127	122	117	111
	tP:	120	140	160	170	180	200	210	220	240	250	260	280	290	300	320
	tB:	70	90	100	120	130	140	150	160	170	170	180	190	200	210	220
350	C:	315	260	230	206	187	176	162	153	142	139	130	122	117	111	107
	tP:	120	140	160	170	190	200	220	230	250	260	280	300	310	330	340
	tB:	70	90	100	120	130	140	150	160	170	170	180	190	200	210	220
300	C:	315	260	230	200	181	171	157	146	136	133	125	117	111	107	101
	tP:	120	140	160	180	200	210	230	250	270	280	300	320	340	350	370
	tB:	70	90	100	120	130	140	150	160	170	170	180	190	200	210	220
250	C:	315	250	222	193	176	162	150	139	130	125	115	109	103	98	93
	tP:	120	150	170	190	210	230	250	270	290	310	340	360	380	400	420
	tB:	70	90	100	120	130	140	150	160	170	170	170	190	200	210	220
200	C:	315	250	214	187	166	150	139	127	117	113	105	98	93	88	84
	tP:	120	150	180	200	230	260	280	310	340	360	390	420	440	470	490
	tB:	70	90	100	120	130	140	150	160	170	170	180	190	200	210	220
150	C:	300	240	200	171	150	136	122	111	103	96	90	84	80	75	71
	tP:	130	160	200	230	270	300	340	380	410	450	480	520	550	590	620
	tB:	70	90	100	120	130	140	150	160	170	170	180	190	200	210	220
100	C:	285	206	171	142	125	109	98	89	81	75	70	65	61	57	54
	tP:	140	200	250	300	350	410	460	510	570	620	670	720	780	830	880
	tB:	70	90	100	120	130	140	150	160	170	170	180	190	200	210	220
50	C:	230	153	120	95	80	69	61	55	49	45	41	38	36	33	31
	tP:	190	300	400	510	620	720	830	930	1040	1150	1250	1360	1460	1570	1680
	tB:	70	90	100	120	130	140	150	160	170	170	180	190	400	210	220

print length in mm

Dynacode II 107:
Transfer ribbon length
600 m

C = cycles per minute
tP = print
tB = return
Back speed = 600 mm/s

print speed in mm/s		5	10	15	20	25	30	35	40	45	50	55	60	65	70	75
600	C:	285	240	206	187	176	162	153	146	139	133	127	122	120	115	111
	tP:	130	140	160	170	180	190	200	210	220	230	250	250	250	260	270
	tB:	80	110	130	150	160	180	190	200	210	220	240	240	250	260	270
550	C:	285	240	206	187	176	162	153	146	139	133	127	122	117	113	109
	tP:	130	140	160	170	180	190	200	210	220	230	240	250	260	270	280
	tB:	80	110	130	150	160	180	190	200	210	220	230	240	250	260	270
500	C:	285	240	206	187	176	162	153	146	139	130	125	120	115	111	107
	tP:	130	140	160	170	180	190	200	210	220	240	250	260	270	280	290
	tB:	80	110	130	150	160	180	190	200	210	220	230	240	250	260	270
450	C:	285	240	206	187	176	162	150	142	136	130	125	120	113	109	105
	tP:	130	140	160	170	180	190	210	220	230	240	250	260	280	290	300
	tB:	80	110	130	150	160	180	190	200	210	220	230	240	250	260	270
400	C:	285	240	206	187	176	157	150	142	133	127	122	115	111	107	101
	tP:	130	140	160	170	180	200	210	220	240	250	260	280	290	300	320
	tB:	80	110	130	150	160	180	190	200	210	220	230	240	250	260	270
350	C:	285	240	206	187	171	157	146	139	130	125	117	111	107	101	98
	tP:	130	140	160	170	190	200	220	230	250	260	280	300	310	330	340
	tB:	80	110	130	150	160	180	190	200	210	220	230	240	250	260	270
300	C:	285	240	206	181	166	153	142	133	125	120	113	107	101	98	93
	tP:	130	140	160	180	200	210	230	250	270	280	300	320	340	350	370
	tB:	80	110	130	150	160	180	190	200	210	220	230	240	250	260	270
250	C:	285	230	200	176	162	146	136	127	120	113	105	100	95	90	86
	tP:	130	150	170	190	210	230	250	270	290	310	340	360	380	400	420
	tB:	80	110	130	150	160	180	190	200	210	220	230	240	250	260	270
200	C:	285	230	193	171	153	136	127	117	109	103	96	90	86	82	78
	tP:	130	150	180	200	230	260	280	310	340	360	390	420	440	470	490
	tB:	80	110	130	150	160	280	190	200	210	220	230	240	250	260	270
150	C:	272	222	181	157	139	125	113	103	96	89	84	78	75	70	67
	tP:	140	160	160	230	270	300	340	380	410	450	480	520	550	590	620
	tB:	80	110	110	150	160	180	190	200	210	220	230	240	250	260	270
100	C:	260	193	157	133	117	101	92	84	76	71	66	62	58	55	52
	tP:	150	200	250	300	350	410	460	510	570	620	670	720	830	830	880
	tB:	80	110	130	150	160	180	190	200	210	220	230	240	260	260	270
50	C:	206	146	113	90	76	66	58	53	48	43	40	37	35	32	30
	tP:	210	300	400	510	620	720	830	930	1040	1150	1250	1360	1460	1570	1680
	tB:	80	110	130	150	160	180	190	200	210	220	230	240	250	260	270

print length in mm

Dynacode II 128
Transfer ribbon length
450 m

C = cycles per minute
tP = print
tB = return
Back speed = 600 mm/s

print speed in mm/s		5	10	15	20	25	30	35	40	45	50	55	60	65	70	75
600	C:	285	240	206	187	176	162	153	146	139	133	127	122	120	115	111
	tP:	130	140	160	170	180	190	200	210	220	230	250	250	250	260	270
	tB:	80	110	130	150	160	180	190	200	210	220	240	240	250	260	270
550	C:	285	240	206	187	176	162	153	146	139	133	127	122	117	113	109
	tP:	130	140	160	170	180	190	200	210	220	230	240	250	260	270	280
	tB:	80	110	130	150	160	180	190	200	210	220	230	240	250	260	270
500	C:	285	240	206	187	176	162	153	146	139	130	125	120	115	111	107
	tP:	130	140	160	170	180	190	200	210	220	240	250	260	270	280	290
	tB:	80	110	130	150	160	180	190	200	210	220	230	240	250	260	270
450	C:	285	240	206	187	176	162	150	142	136	130	125	120	113	109	105
	tP:	130	140	160	170	180	190	210	220	230	240	250	260	280	290	300
	tB:	80	110	130	150	160	180	190	200	210	220	230	240	250	260	270
400	C:	285	240	206	187	176	157	150	142	133	127	122	115	111	107	101
	tP:	130	140	160	170	180	200	210	220	240	250	260	280	290	300	320
	tB:	80	110	130	150	160	180	190	200	210	220	230	240	250	260	270
350	C:	285	240	206	187	171	157	146	139	130	125	117	111	107	101	98
	tP:	130	140	160	170	190	200	220	230	250	260	280	300	310	330	340
	tB:	80	110	130	150	160	180	190	200	210	220	230	240	250	260	270
300	C:	285	240	206	181	166	153	142	133	125	120	113	107	101	98	93
	tP:	130	140	160	180	200	210	230	250	270	280	300	320	340	350	370
	tB:	80	110	130	150	160	180	190	200	210	220	230	240	250	260	270
250	C:	285	230	200	176	162	146	136	127	120	113	105	100	95	90	86
	tP:	130	150	170	190	210	230	250	270	290	310	340	360	380	400	420
	tB:	80	110	130	150	160	180	190	200	210	220	230	240	250	260	270
200	C:	285	230	193	171	153	136	127	117	109	103	96	90	86	82	78
	tP:	130	150	180	200	230	260	280	310	340	360	390	420	440	470	490
	tB:	80	110	130	150	160	280	190	200	210	220	230	240	250	260	270
150	C:	272	222	181	157	139	125	113	103	96	89	84	78	75	70	67
	tP:	140	160	160	230	270	300	340	380	410	450	480	520	550	590	620
	tB:	80	110	110	150	160	180	190	200	210	220	230	240	250	260	270
100	C:	260	193	157	133	117	101	92	84	76	71	66	62	58	55	52
	tP:	150	200	250	300	350	410	460	510	570	620	670	720	830	830	880
	tB:	80	110	130	150	160	180	190	200	210	220	230	240	260	260	270
50	C:	206	146	113	90	76	66	58	53	48	43	40	37	35	32	30
	tP:	210	300	400	510	620	720	830	930	1040	1150	1250	1360	1460	1570	1680
	tB:	80	110	130	150	160	180	190	200	210	220	230	240	250	260	270

print length in mm

15 Environmentally-Friendly Disposal

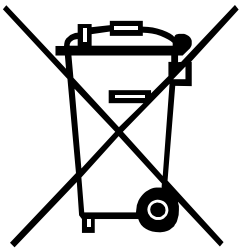

Manufacturers of B2B equipment are obliged to take back and dispose of old equipment that was manufactured after 13 August 2005. As a principle, this old equipment may not be delivered to communal collecting points. It may only be organised, used and disposed of by the manufacturer. Valentin products accordingly labelled can therefore be returned to Carl Valentin GmbH.

This way, you can be sure your old equipment will be disposed of correctly.

Carl Valentin GmbH thereby fulfils all obligations regarding timely disposal of old equipment and facilitates the smooth reselling of these products. Please understand that we can only take back equipment that is sent free of carriage charges.

The electronics board of the printing system is equipped with a battery. This must only be discarded in battery collection containers or by public waste management authorities.

Further information on the WEEE directive is available on our website www.carl-valentin.de.

16 Index

C

clamping force (ribbon roll) 47
connection 42
connection side of print mechanics 11
connector assignment of control unit 12
continuous mode
  material guiding 14
  material speed 13
  print principle 13
control inputs/control outputs . 23, 24, 25, 26, 27, 28, 29, 30, 31, 32, 34
cycles
  continuous mode 153, 154, 155, 156, 157, 158
  intermittent mode 159, 160, 161

D

date/time
  daylight saving time 95
  end daylight saving time 95
  start daylight saving time 95
decommissioning/dismantling 9
device settings
  print control 67
  print job 65, 66
  user environment 67

E

encoder, pin assignment 35
environmentally-friendly disposal 163
error messages/corrections 141, 142, 143, 144, 145, 146, 147, 148, 149, 150

F

function menu
  date/time 95
  device settings 65, 66, 67
  emulation 94
  I/O parameter 68, 69
  interface 93
  layout 64
  machine parameters (continuous mode) 60, 61
  machine parameters (intermittent mode) 62, 63
  main menu 105
  maintenance 104, 105

menu structure (continuous mode) 49, 50, 51, 52, 53
menu structure (intermittent mode) 54, 55, 56, 57, 58
network 92
password 102, 103
print settings 59
service functions 96, 97, 98, 99, 100, 101
functions/profiles for inputs/outputs 32, 34

H

hotstart 151, 152

I

I/O parameter, port parameters 68, 69
initial operation 43
initial operation, preparations 42
Inputs/outputs 26
installation at machines 38
instructions 7
intended use 7, 8
intermittent mode
print position 15
print principle 15

L

layout settings 64

M

maintenance
LCD 105
print preview 104
system settings 105
test function 104
maintenance/cleaning
angle adjustment 131
cycle optimisation (intermittent mode) 133
general cleaning 127
print quality optimisation 132
printhead, cleaning 128
printhead, replacing 129, 130
ribbon roller, cleaning 128
schedule 127

O

operating conditions 17, 18, 19

P

password
- network ... 103
- operation ... 102

pneumatic power supply, connection ... 40
pressure power, adjusting ... 41
print control ... 43

R

required space, cable outgoing ... 39
ribbon saving ... 70
ribbon saving, continuous mode
- savestrt ... 81, 82, 83, 84
- shift ... 75, 76, 77, 78, 79, 80
- standard ... 71, 72, 73, 74, 75

ribbon saving, intermittent mode
- shift ... 87, 88, 89, 90, 91
- standard ... 85, 86

S

safety instructions ... 8
scope of delivery ... 37
service functions
- brake service ... 99
- device status ... 97
- encoder service ... 100
- I/O status ... 99, 100
- ribbon service ... 98, 99
- sensor status ... 96

signal diagrams
- continuous mode ... 135, 136, 137, 138
- intermittent mode ... 139

T

technical data ... 21, 22
touch-screen display
- alphanumeric input ... 114
- favorites list ... 111, 112
- foil keyboard display ... 126
- information zone ... 126
- main menus ... 108
- maintenance zone ... 116, 117, 118, 119, 120, 121
- memory menu ... 124, 125
- navigation zones ... 115

numeric input 113
parameter input 113
process data 122, 123
structure 107
submenus 108
user-defined info field 109, 110
transfer ribbon loading
coating inside 46
coating outside 45

U

unpacking 37

REDEMAC
3540 Griffith St, Saint-Laurent, Quebec H4T 1A7
Phone: (888) 335-9570

www.redemac.com
request@redemac.com

REDEMAC

Carl Valentin GmbH
Neckarstraße 78 – 86 u. 94 . 78056 Villingen-Schwenningen
Phone +49 7720 9712-0 . Fax +49 7720 9712-9901
info@carl-valentin.de . www.carl-valentin.de